TeamEngineerNH, PLLC
67B North Mast Street
Goffstown, NH 03045-1729
Tel 603.497.3137
Fax 603.497.4918
www.engineernh.com

December 6, 2012

Ms. Naomi Bolton
Town of Weare
15 Flanders Memorial Road
Weare, NH 03281

RE: Weare Town Hall sill inspection.
Inspectors: David Ely, AIA, Glenn Dodge carpenter, timber framer, structural designer

Dear Naomi,

Glenn Dodge and I visited the Weare Town Hall today and made limited invasive testing to determine the extent of sill deterioration for your use in writing an RFP for repairs. We looked at front, side and back doors. The western door on the south side of the building has had threshold and trim repair and no further deterioration is evident except the door itself which is in need of replacement. The sill was not inspected. The eastern door on the south side is covered and in fair condition. The single 3'9" door from the back of the stage is also in fair condition.

The front doors are in the worst condition and need immediate attention. The doors are in 2 pairs of 1'-11" leaves. The trim under the northern set of double entry doors was removed, and an investigation was made in the basement in that area. There is a replacement sill under the front doors. This sill appears to be hemlock. Lap joints were made to tie it into the existing sill. This new sill is poorly supported, but does not appear to have shifted or rotated. Very minor rot was found in the basement indicating that there is not moisture migrating up from the foundation into the sill.

Both sets of front doors and wood thresholds above the sill are showing severe signs of deterioration caused by moisture intruding from above which becomes trapped under the doors, behind the trim and stairs. Upon removing some of the rotted wood threshold we found dry rot to be as much as 8" deep in some places and well into the sill. We removed the trim from under the northern door and saw dry rot in the hemlock replacement sill which has started to migrate north into the original sill.

Rotted door threshold with more dry rot below in sub-floor and sill.

Door trim under threshold removed showing extensive dry rot in sill below

Front door showing how dry rot has migrated into the door itself

The narrow doors present building code issues. The assembly space measures approximately 39'5" x 47'10" plus the entry alcove, bathrooms, and janitor closet. There is a second floor which was locked and we were not able to go further than the top of the stair. The Building Inspector and Fire Inspector report that the second floor has been condemned and is not in use due to structural deficiencies. No structural report is known to exist.

From International Building Code 2009:

- Occupant Load for Assembly occupancy without fixed seats is 7 sq ft per person, 1,888 sq ft = 270.
- Minimum egress width for each door opening shall be .15 in per occupant served, x 270 = 40".
- All rooms and spaces within each story with occupant load of 1-500 shall be provided with 2 exits.
- Doors provided for egress purposes in numbers greater than required by code shall meet the requirements for egress doors.
- Doors shall swing in the direction of egress travel where serving an occupant load of 50 or more.
- Landings shall have a width not less than the door.
    - Doors in the fully open position shall not reduce a required dimension by more than 7".
    - When a landing serves an occupant load of 50 or more, doors in any position shall not reduce the landing to less than ½ it's required width.
- Thresholds at doorways shall not exceed .5" in height.
    - Raised thresholds greater than .25" at doorways shall be beveled with a slope not greater than 1:2
- There shall be a floor or landing on each side of a door.
    - Such floor or landing shall be at the same elevation on each side of the door.
    - Landings shall be level except for exterior landings which are allowed to slope not more than ¼" per ft.
- Each door in a means of egress from an assembly occupancy having an occupant load of 50 or more shall not be provided with a latch or lock unless it is panic hardware or fire exit hardware.
- Manually operated flush bolts or surface bolts are not permitted.
- At least 60% of all public entrances shall be accessible.

Recommendations for work to be performed:

1. Remove existing doors, frames and trim. Investigate surrounding framing members to determine if additional dry rot has occurred.
2. Remove existing vinyl floor covering and sub-floor for the full width of the front doors and 4' into the building.
3. Temporarily support existing structure and cut joists back from sills to a point where solid wood is found.
4. Remove existing rotted sill and investigate surrounding framing for additional deterioration. Cut wood to remain to form the bottom of a lap joint.
5. Remove loose stone rubble from foundation wall to a reasonable point under the sill work.
6. Form and pour concrete infill to level up foundation wall. Place #4 steel bars where 2" cover is possible.

7. Remove front concrete steps from building.
8. Install new sill w/ proper lap joints. Side-splice or replace joists and use joist hangers to support them on the new sill.
    a. Impregnate existing wood with borate product such as Tim-Bor or equal.
9. Install pressure-treated plywood sub-floor.
10. Install peel and stick membrane such as Bituthene or equal over sub-floor and exterior of sill and onto concrete and stone foundation wall.
11. Repair wall framing as required.
12. Install new doors per specification.
13. Install aluminum flashing and counter flashing under threshold and over peel and stick membrane.
14. Install new trim, interior and exterior.
15. Fabricate new concrete stair to meet code. Pitch stair landing away from building.
16. Install finish floor as selected by owner.
17. Paint all new work to match existing.

Respectfully submitted,

David Ely, AIA

Enclosures

Distribution via email to: nbolton@weare.nh.gov

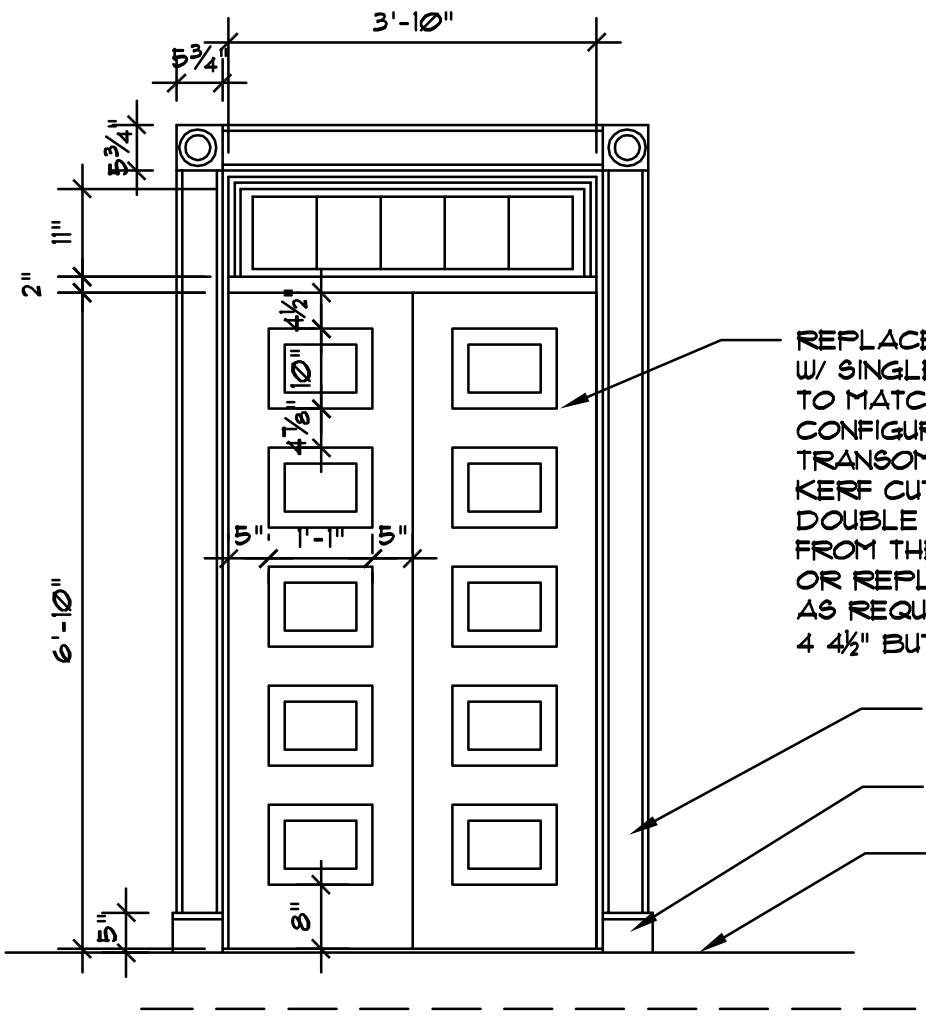

REPLACE EXISTING 2 LEAF DOORS W/ SINGLE LEAF DOOR IN NEW FRAME TO MATCH EXISTING FOR SIZE AND CONFIGURATION. PROVIDE SELF-CLOSERS. TRANSOM GLASS TO BE INSULATED LOW-e KERF CUT CENTER OF DOOR TO MIMIC DOUBLE DOOR. PROVIDE PANIC HARDWARE FROM THE INSIDE. INSPECT FRAMING, REPAIR OR REPLACE DEFECTIVE OR ROTTEN WOOD AS REQUIRED TO SUPPORT NEW DOOR. PROVIDE 4 4½" BUTT HINGES PER DOOR.

REMOVE AND PRESERVE TRIM. REPLACE DAMAGED OR ROTTED WOOD IN KIND.

RAISE BASE TRIM TO NEW SIDEWALK LEVEL

REMOVE EXISTING LANDING AND STAIR. NEW LANDING TO BE LEVEL WITH FLOOR AND PITCH AWAY FROM BUILDING ¼" PER FT. THRESHOLD GO BE ADA COMPLIANT, MAX ½' HEIGHT W/ TO ¼" BEVELED.

ELEVATION
½"=1'-0"

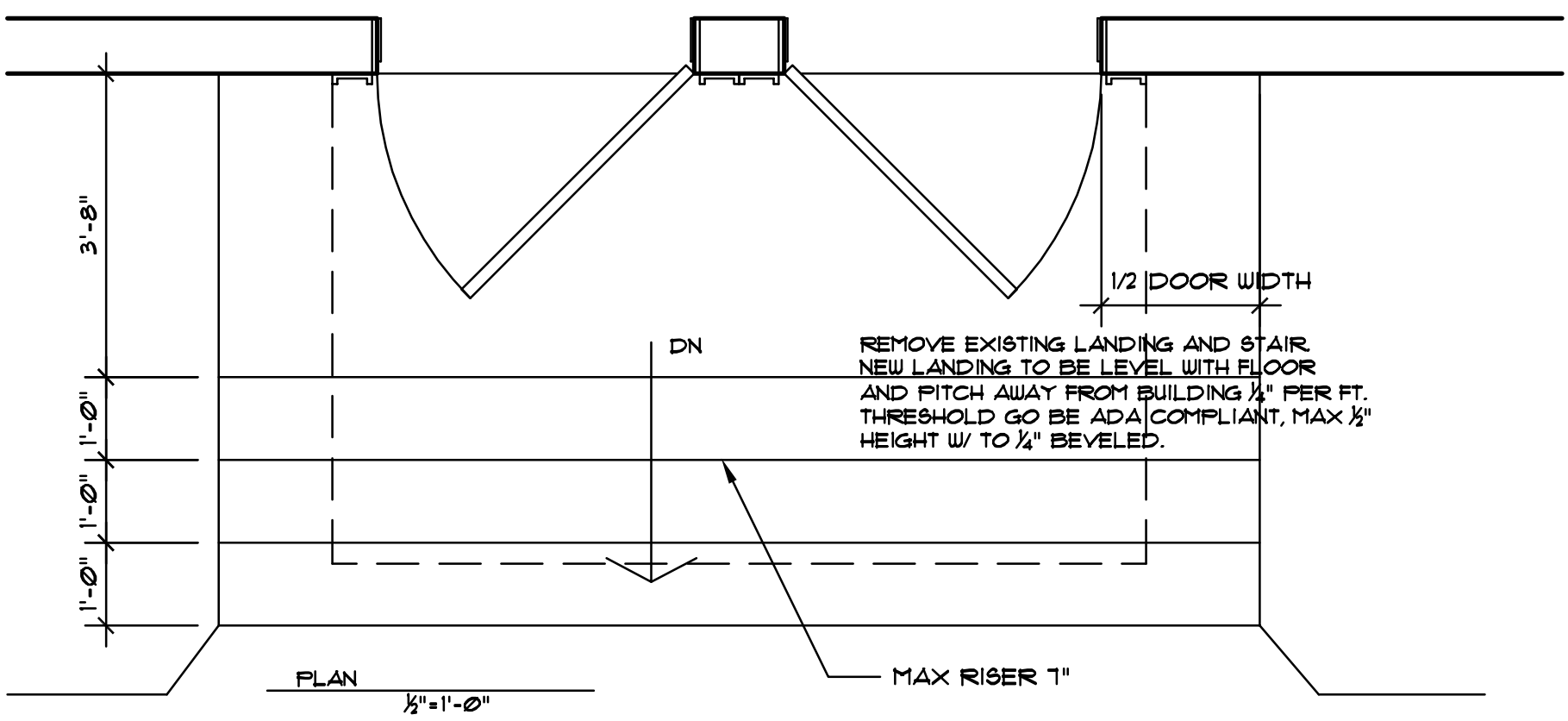

PLAN
½"=1'-0"

IBC 1008.1.5 LANDINGS AT DOORS SHALL HAVE A WIDTH NOT LESS THAN THE WIDTH OF THE DOOR. WHEN A LANDING SERVES AN OCCUPANT LOAD OF 50 OR MORE, DOORS IN ANY POSITION SHALL NOT REDUCE THE LANDING TO LESS THAN ONE-HALF ITS REQUIRED WIDTH. LANDINGS SHALL HAVE A LENGTH MEASURED IN THE DIRECTION OF EGRESS TRAVEL OF NOT LESS THAN 44".

Team ENGINEERING
Building Inspection & Design

TeamEngineerNH, PLLC
67B North Mast Street
Goffstown, NH 03045-1729
Tel 603.497.3137
Fax 603.497.4918
www.engineernh.com

PROJECT 10357
DECEMBER 5, 2012

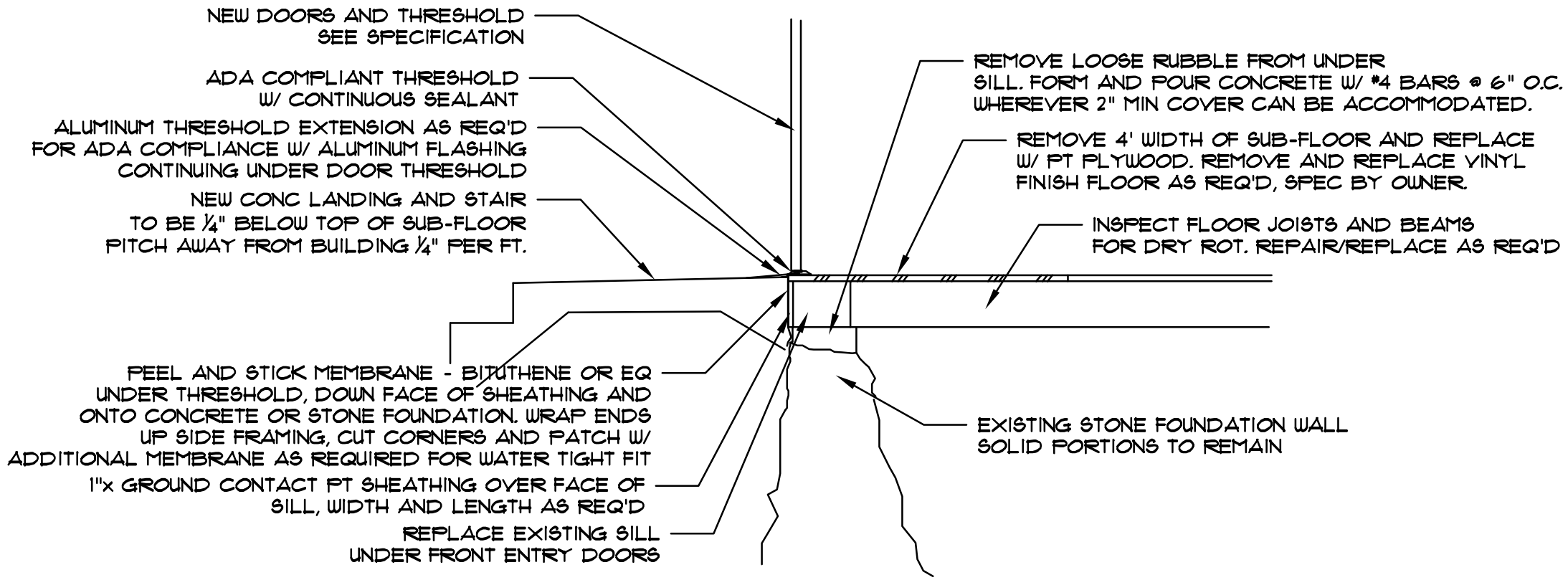

SECTION DETAIL @ FRONT ENTRY
½"=1'-0"

TeamEngineerNH, PLLC
67B North Mast Street
Goffstown, NH 03045-1729
Tel 603.497.3137
Fax 603.497.4918
www.engineernh.com

PROJECT 10357
DECEMBER 5, 2012

TeamEngineerNH, PLLC
67B North Mast Street
Goffstown, NH 03045-1729
Tel 603.497.3137
Fax 603.497.4918
www.engineernh.com

Weare Town Hall, Project number 10357

December 5, 2012

SECTION 081433

STILE AND RAIL WOOD DOORS

PART 1 - GENERAL

1.01 WORK INCLUDED

A. Furnish stile and rail wood doors as described in door schedule and shown on drawings. General and Supplementary Conditions as provided by owner.

1.02 RELATED SECTIONS

A. Flush Wood Doors, Section 08210

B. Metal Doors and Frames, Section 08110

C. Millwork and Trim, Section 06200

D. Finish Hardware, Section 08710

E. Glazing, Section 08800

F. Painting, Section 09900

1.03 REFERENCES

A. AWI/AWMAC Quality Standards Illustrated (QSI), current edition

B. ANSI/W.D.M.A Quality Standards current edition

C. Underwriters Laboratories, Inc. (UL) and Underwriters Laboratories of Canada (ULC):

1. UL 10B Fire Tests of Door Assemblies
2. UL 10C-1998 Positive Pressure Fire Test of Door Assemblies.

D. National Fire Protection Agency (NFPA)

1. NFPA 80 Fire Doors and Windows
2. NFPA 252 Standard Method of Fire Tests for Door Assemblies.

E. ASTM International:

1. ASTM E152 Standard Methods of Fire Tests of Door Assemblies.
2. ASTM E2074 Standard Test Method for Fire Tests of Door Assemblies, Including Positive Pressure Testing of Side-Hinged and Pivoted Swinging Door Assemblies.

F. Warnock-Hersey International-Intertek Testing

1. Directory of Certification Listings for Fire Doors.

1.04 SUBMITTALS

A. Comply with owner's requirements, submit complete schedules including shop drawings for approval.

B. Indicate plans and elevations, materials, surface grain directions, profiles, assembly methods, joint details, fastening methods, accessories, hardware compliance with specified fire-retardant treatments, preservative treatments, and schedule of finishes.

C. Submit 3 samples of veneer, minimum of 6 x 6" illustrating expected range of component finish color and/or grain. The sample shall bear identification of the project, architect or designer, general contractor, woodwork manufacturer, items to which the finish applies and the system utilized to attain the finish.

1.05 QUALITY ASSURANCE

A. Perform work in accordance with AWI Section 1400 Custom Grade quality.

B. Work in this section shall comply with the specified Grade(s) of Work and Section (s) of the current edition of the AWI/AWMAC Quality Standards Illustrated or the current edition of W.D.M.A. Quality Standards.

1.06 QUALIFICATIONS

A. Manufacturers who are members in good standing of the Architectural Woodwork Institute (AWI), Architectural Woodwork Manufacturers Association of Canada (AWMAC) and the Window and Door Manufacturers Association (WDMA) and are familiar with these standards.

1.07 DELIVERY, STORAGE AND HANDLING

A. Comply with Owner's requirements.

B. Store doors on a flat level surface, in a clean, dry, well ventilated area. Keep doors a minimum of 3 ½" off floor.

C. Doors shall not be exposed to excessive heat, moisture, dryness or direct sunlight.

D. Break any protective plastic packaging on site to permit ventilation.

E. Ensure that the top, bottom and any cut-outs on doors are sealed immediately after removal of protective packaging.

F. Handle doors with clean, dry hands and/or gloves.

G. Do not drag doors across one another.

1.08 WARRANTY

A. Comply with Manufacturer's requirements for warranty

B. Provide three year warranty for exterior doors if factory finished.

C. Include coverage for defective materials, including tolerances for warp and delamination of materials.

PART 2 - PRODUCTS

2.01 MANUFACTURERS

A. Harring Doors

B. The Maiman Company

C. Eggers Industries

D. Approved equal

2.02 DOOR CONSTRUCTION

A. Exterior Doors

1. Exterior doors as shown on attached drawing. Field verify all dimensions prior to fabrication.
2. Stiles shall be constructed of LSL core material laminated with a minimum 1/16" "A" grade veneer, African Mahogany or other paint grade as approved by owner .
3. Rails shall be solid lumber construction.

4. Cope and stick joinery of stiles and rails using ½” x 4” dowels. Joints to have a minimum of 1 dowel.
5. Muntin bars shall have ¼” x 2 ½” dowels at every joint.
6. Pressure fit joints using type 1 waterproof glue and silicone caulk to prevent moisture penetration.
7. Flat Panels shall be constructed of an exterior grade core with a minimum overall thickness of 5/8”.
8. Jambs to be single rabbit K.D. primed, run long to cut in field.
9. Transom to be 5 light, primed.
10. Hardware to be VonDuprin 99 panic hardware with all associated plates, escutcheons, rim cylinder, hinges and other hardware for a complete installation. Finish US 10B Oil Rubbed Bronze.
11. Weatherstrip all edges including sweep for threshold.
12. Threshold to be ADA compliant w/ extension and flashing as req’d.
13. Exterior door surfaces and jambs to be primed.
14. Transom to be of same material as door w/ 5 panel insulated low-e glazing max U .28.

2.03 FABRICATION

A. Fabricate to AWI Section 1400 Custom Quality Standards.

B. Hardware cutouts are to be pre-machined by the manufacturer. Hinge screw pilot holes in mineral core fire doors shall be bored by door manufacturer.

C. When necessary to cut and fit on site, provide materials with ample allowance for cutting. Reseal or refinish any machining alterations required at jobsite prior to installation

2.04 FINISHING MATERIALS AND APPEARANCE

A. Doors shall be finished at the factory using the manufacturer’s standard finishing system in conformance with AWI Quality Standards Section 1500.

B. Raised panel tongues are to be stained prior to assembly when color is required.

PART 3 - EXECUTION

3.01 INSTALLATION

A. Install work in accordance with AWI Quality Standards Section 1700 and NFPA 80 Fire Doors and Windows.

B. Doors and frames must be installed plumb, square and level.

C. Clearance between door edges and door frame shall be a minimum of 1/16” on hinge edge and 1/8” on the latch edge and top rail.

D. Contractors and their personnel engaged in the work shall be able to demonstrate successful experience with work of comparable extent, complexity and quality to that shown and specified.

3.02 ADJUSTING

A. Adjust work under provisions of AWI Quality Standards Section 1700.

B. Ensure that doors swing freely and do not bind in their frame. Adjust the finish hardware for proper alignment, smooth operation and proper latching without necessary force or excessive clearance.

End of Section

TeamEngineerNH, PLLC
67B North Mast Street
Goffstown, NH 03045-1729
Tel 603.497.3137
Fax 603.497.4918
www.engineernh.com

Weare Town Hall, Project number 10357

December 5, 2012

STEEL DOORS AND FRAMES
08 11 13

1. GENERAL

1.1. SECTION INCLUDES
- A. Comply with the requirements of Division 1.
- B. Provide the following products as listed on the door schedule and shown on the drawings, including but not limited to the following:
  1. Hollow metal doors
  2. Hollow metal frames
  3. Side lights, transom frames and borrowed lights
  4. Hollow metal panels
  5. Preparation of hollow metal doors and frames for finish hardware.

1.2. RELATED SECTIONS
- A. The following description of work is included for reference only and shall not be presumed complete:
  1. Finish carpentry: 06 20 00
  2. Wood doors: 08 14 00
  3. Stainless steel doors: 08 11 19
  4. Sound control door assemblies: 08 34 73
  5. Door hardware: 08 71 00
  6. Glazing: 08 80 00
  7. Painting and coating: 09 90 00
  8. Electrical: 26 00 00

1.3. REFERENCES

- A. ANSI A250.3-2007: Test Procedure and Acceptance Criteria for Factory Applied Finish Painted Steel Surfaces for Steel Doors and Frames (recommended for factory finished products)
- B. ANSI A250.4-2001: Test Procedure and Acceptance Criteria for Physical Endurance for Steel Doors and Hardware Reinforcings
- C. ANSI A250.10-1998 (R2004): Test Procedure and Acceptance Criteria for Prime Painted Steel Surfaces for Steel Doors and Frames
- D. ANSI A250.13-2008: Testing and Rating of Severe Windstorm Resistant Components for Swinging Door Assemblies
- E. ANSI/UL 1784-2004: Air Leakage Tests of Door Assemblies, 3rd edition
- F. ASTM A653/A653M-10: Standard Specification for Steel Sheet, Zinc-Coated (Galvanized) or Zinc-Iron Alloy-Coated (Galvannealed) by the Hot-Dip Process

G. ASTM E90-09: Test Method for Laboratory Measurement of Airborne Sound Transmission Loss of Building Partitions and Elements
H. ASTM C518 – 04: Standard Test Method for Steady-State Thermal Transmission Properties by Means of the Heat Flow Meter Apparatus
I. ASTM E413-04: Classification for Rating Sound Insulation
J. NAAMM-HMMA 803-08: Steel Tables
K. NAAMM-HMMA 810-09: Hollow Metal Doors
L. NAAMM-HMMA 820-08: Hollow Metal Frames
M. NAAMM-HMMA 831-11: Recommended Hardware Locations for Hollow Metal Doors and Frames
N. NAAMM-HMMA 840-07: Guide Specification for Installation of Hollow Metal Doors and Frames
O. NAAMM-HMMA 850-00: Fire Rated Hollow Metal Doors and Frames
P. NFPA 80-10: Standard for Fire Door and Other Opening Protectives
Q. NFPA 101: Life Safety Code
R. NFPA 105-10: Standard for the Installation of Smoke Door Assemblies
S. NFPA 252-08: Standard Methods of Fire Tests of Door Assemblies
T. NFPA 257-07: Standard on Fire Tests for Window and Glass Block Assemblies
U. CAN/ULCS770-09: Standard Test Method for Determination of Long-term Thermal Resistance of Closed-Cell Thermal Insulating Foams
V. UL 10C: Standard for Safety Positive Pressure Fire Tests of Door Assemblies

1.4. PRE-INSTALLATION MEETING

A. Plan and manage a pre-installation meeting to explain the proper methods to install hollow metal doors and frames.

1.5. SUBMITTALS

A. Make submittals in accordance with Owner's requirements.
B. Provide the following items in the submittal package:
    1. Door schedule
    2. Elevations of each door type
    3. Details of doors, including vertical and horizontal edge details and metal thickness
    4. Frame details for each frame type, including profiles and metal thickness
    5. Locations of reinforcements and preparation for hardware
    6. Details of each different wall opening condition
    7. Details of anchorage, joints, field splices and connections
    8. Details of accessories
    9. Details of moldings, removable stops and glazing
    10. Details of conduit and preparations for power, signal, and control systems
C. Upon Owner's request, provide technical information on selected items.
D. Upon Owner's request, provide 254 mm x 254 mm (10 in x 10 in) corner sample on selected items.
    1. Doors: Show vertical edge, end channels, core, hinges and other applied hardware reinforcements; glazing if applicable.
    2. Frames: Show profile, corner joint at head and jamb, anchors, glazing stop to show intersection between head and jamb; fixed panels if applicable.

E. Finish paint: Submit finish paint color samples of 127 mm x 127 mm (5 in x 5 in).
F. Provide products meeting the following LEED performance criteria:

    1. MRc4: For a product with recycled content, documentation indicating percentages by weight of post-consumer and pre-consumer recycled content. Provide product

with maximum pre-consumer and post-consumer recycled content available, supported by appropriate documentation

G. Test and evaluation reports: Submit the following test and evaluation reports:
    1. Steel door and frame assemblies supplied under this section meet acceptance criteria of ANSI A250.4, Level A.
    2. Primer applied on steel door and frame assemblies meet acceptance criteria of ANSI A250.10.
    3. Factory painted steel door and frame assemblies meet acceptance criteria of ANSI A250.3.
    4. Insulated doors supplied in exterior openings meet specified thermal resistance rating.
    5. Acoustic door and frame assemblies provide the STC and sound TL values specified within the critical frequency range, as determined and scheduled by the Consultant.
    6. Windstorm rated assemblies meet standard ANSI A250.13, Class 1 requirements.
    7. Ensure reports include name of testing authority, date of test, location of test facility, descriptions of test specimens, procedures used in testing and indicate compliance with acceptance criteria of the test.

H. Closeout submittals
    1. Provide the following information to the Owner:
        a. One copy of the as-built door and frame schedule;
        b. Name, address and phone number of manufacturer's distributors;
        c. One copy of the manufacturer's product warranty;
        d. Manufacturer's product maintenance instructions.

1.6. QUALITY ASSURANCE

A. Manufacturers: Execute work in this Section by a manufacturer who is a member of NAAMM. Ensure product quality meets standards set by this association.
B. Ensure product is manufactured by a firm experienced in design and production of standard and custom commercial steel door and frame assemblies, integration of builders' or electronic hardware and glazing assemblies, and other items affecting work.
C. Distributors: Execute work in this Section by a distributor who has a minimum of 5 years' experience in similar projects.
D. Installers: Execute work in this Section by an installer who has a minimum of 5 years' experience in similar projects.
E. Doors and frames from a single source manufacturer.

1.7. DELIVERY, STORAGE AND HANDLING

A. Delivery:
    1. Make deliveries in accordance with Owner's requirements.
    2. Identify products with a label indicating manufacturer's name, opening number, product description and dimensions.
    3. Protect doors and frames during shipping.
    4. Upon delivery, inspect products for quantity and damage.
    5. Repair or replace damaged products before installation.

B. Storage and handling:
    1. Store and handle products in accordance with owner's requirements.
    2. Store products in a clean, dry and secure area.
    3. Store and protect materials in accordance with NAAMM-HMMA 840.

4. Remove wrappings or coverings from doors upon delivery at site. Store doors and welded frames in a vertical position with a minimum of 6 mm (1/4 in) space between them. Place material on blocking at least 102 mm (4 in) off the ground to permit air circulation.

1.8. WARRANTY

A. Manufacturer's warranty: One year from substantial completion of the project on both material and workmanship.

2. PRODUCTS

2.1. MANUFACTURERS

A. Acceptable manufacturer:

1. de La Fontaine Inc. : www.delafontaine.com.

B. Substitutions:

1. Comply with Owner's requirements.
2. Equal products in design, function and quality will be accepted upon Owner's approval only.

2.2. MATERIALS

A. Steel requirements:

1. Interior doors and frames: Comply with ASTM A653, Designation ZF 120 (A40)
2. Exterior doors and frames: Comply with ASTM A653, Designation ZF 180 (A60).

2.3. ACCESSORIES

A. Glazing moldings and stops

1. Sandwich overlapping kit
   a. Two components with welded mitered corners and secured with minimum # 6 corrosion-resistant countersunk sheet metal screws.
   b. Glazing moldings fabricated from 20-gauge, 0.8 mm (0.032 in) minimum.
   c. Fire-rated doors shall be prepared for listed glazing as required in accordance with the door manufacturer's fire rating procedure.
   d. Install screws on non-secure side.
   e. 18-gauge, 1.1 mm (0.042 in) channel reinforcements on glass size equal to or bigger than half-glass.
   f. Glazing to be insulated low-e max U value .28.

2. Flush kit
   a. On non-secure side, provide a full flush, non-removable molding.
   b. Glazing moldings fabricated from 20-gauge, 0.8 mm (0.032 in) minimum.
   c. Removable glass stops shall be channel-shaped, 20-gauge, 0.8 mm (0.032 in) minimum thickness, with tight-fitting butt or mitered corners and secured with minimum # 6 corrosion-resistant countersunk sheet metal screws.
   d. Fire-rated doors shall be prepared for listed glazing as required in accordance with the door manufacturer's fire rating procedure.
   e. Install screws on non-secure side.
   f. 18-gauge, 1.1 mm (0.042 in) channel reinforcements on glass size equal to or bigger than half-glass.

g. Glazing to comply with Section 08 80 00.

B. Frame accessories

1. Provide dust/mortar box at strike location on drywall and masonry frames.
2. Provide mortar guards for hinge reinforcements on masonry frames.
3. Provide temporary spreaders on welded frames. Provide one (1) bar for frames with less than 178 mm (7 in) jamb depth. Provide two (2) bars for frames with 178 mm (7 in) or greater jamb depth.
4. Drill holes for silencers. Single openings: 3 per strike jamb, located at hinge height. Pair openings: 2 per header at approximately 150 mm (6 in) each side of centerline of head stop.

2.4. DOOR FABRICATION

A. Door cores:

1. Exterior openings: Urethane core: Rigid, cellular type, board, or foamed-in-place containing no urea formaldehyde resins and a minimum R value of 10.0 (hr x°F x sq.ft)/BTU, conforming to LTTR, CAN/ULCS770.

2. Temperature rise: Core composition to limit temperature rise on unexposed side of door to 250 degrees C (450 F) at 30 minutes. Test core as part of complete assembly in accordance with NFPA 252.

B. <u>Hollow metal doors in moderate duty application</u>

1. Physical performance: Level B according to ANSI A250.4.
2. Metal thickness: 18-gauge, 1.1 mm (0.042 in).
3. Edge construction: Full flush lock seam on edge.
4. Fabricate door to be flush with one continuous face free from joints, tool markings and abrasions, and with provision for glass and/or louvers as indicated on Door Schedule and Drawings.

C. Door models

1. As indicated in the Door and Frame schedule.

a. Door with recessed panel
1. See attached drawing for design.
2. Molding to be de la Fontaine stock hardwood WM 513 protruding.

D. End channels:

1. Exterior door:
a. Top of door: Close top of door with same material as face sheets, minimum 18-gauge, 1.1 mm (0.042 in). Steel flush channel, putty-filled seam and ground smooth, sealed, projection welded.
b. Bottom of door: Fully continuously welded centered seam, no putty with flush internal reinforcement of minimum 18-gauge, 1.1 mm (0.042 in).
c. Provide weep-hole openings in bottom of exterior doors to allow moisture to escape.

E. Vertical edges on active doors:

1. Beveled edges on both sides: 3 mm per 50 mm, (1/8 in per 2 in). Square vertical edges are not acceptable.

2.5. FRAME FABRICATION

A. Hollow metal frames in moderate duty application

1. Frames:
   a. Physical performance: Level B according to ANSI A250.4.
   b. Metal thickness: 16-gauge, 1.34 mm (0.053 in).
   c. Metal thickness for openings over 1219 mm (48 in): 14-gauge, 1.70 mm (0.067 in).
   d. Frame assembly: Face welded, dressed smooth with seamless face.

2. Transom frame:

   a. Metal thickness: 16-gauge, 1.34 mm (0.053 in).
   b. Frame assembly: Face welded, dressed smooth with seamless face.
   c. Hollow metal panel: Same material, construction and finish as adjacent door assemblies.
   d. Glazing bead: 18-gauge, 1.1 mm (0.042 in), screw applied with countersunk holes, butted corners. Install screws on non-secure side.
   e. Glazing to be double glazed low-e max U .28.
   f. When required due to site access or shipping limitations, fabricate frame product for large openings in sections, with splice joints for field assembly. Provide alignment plates or angles at each joint, fabricated of same thickness metal as frames.

3. Exterior frame, side light, transom frame, borrowed light:
   a. Provide thermal break frame profile.

2.6. ANCHORS

A. Suitable for wall conditions
   1. Located close to hinge reinforcements and at the same height on strike jamb. Quantity: 2 per jamb up to 1,524 mm (60 in) of door opening height, one additional anchor for each additional 762 mm (30 in) of door height (or fraction thereof).
   2. Provide a welded adjustable floor anchor at the bottom of each jamb on welded frames; same material as frame and with 2 holes for bolting to floor.
   3. Masonry anchors: Provide T-strap wall anchors, minimum 16-gauge, 1.34 mm (0.053 in).
   4. Existing wall anchors: Minimum 18-gauge, 1.1 mm (0.042 in), spot welded to the frame.
   5. Steel/wood stud anchors: Minimum 18-gauge, 1.1 mm (0.042 in). Provide steel snap-in or welded in “Z” type stud anchors.
   6. Knockdown frame: Adjustable compression anchors and L brackets spot welded to back of frame.

2.7. SPECIAL PROFILES

A. Terminated stops: Where specified, shall be capped at heights as shown on the approved submittal drawings, and jamb joints below terminated stops shall be welded, filled and ground smooth so that there are no visible seams. Provide terminated stops 152 mm (6 in) above finish floor with a 45 **[**90**]**-degree angle cut.

2.8. CLEARANCES

A. On non-fire rated openings, the clearance shall be 3 mm (1/8 in) between the door and frame and between meeting edges of a pair of doors. The clearance between the bottom of the door and the bottom of the frame shall be 19 mm (3/4 in) without threshold.

2.9. MANUFACTURING TOLERANCES

A. Frame:
   1. Width and height: +1.6 mm (1/16 in), -0.8 mm (-1/32 in)
   2. Face, stop and rabbet: +/- 0.8 mm (+/- 1/32 in)
   3. Jamb depth: +/- 1.6 mm (+/- 1/16 in),

B. Door:
   1. Width and height: +/- 1.2 mm (+/- 3/64 in)
   2. Thickness: +/- 1.6 mm (+/- 1/16 in)
   3. Edge flatness: 1.6 mm (1/16 in) maximum
   4. Surface flatness: 3.1 mm (1/8 in) maximum
   5. Door twist: +/- 1.6 mm (+/- 1/16 in)

C. Hardware:
   1. Cutouts: Template dimension +0.38 mm (+0.015 in)
   2. Location: +/- 0.8 mm (+/- 1/32 in)
   3. Between hinge centerlines: +/- 0.4 mm (+/- 1/64)

2.10. FRAME HARDWARE PREPARATION

A. Factory to prepare hollow metal frame to receive template mortised hardware; include cut-outs, reinforcement, mortising, drilling, and tapping according to the Hardware manufacturer's requirements.
B. Surface applied hardware: Factory reinforced only, 12-gauge, 2.36 mm (0.093 in).
C. Hinge and pivot reinforcements: 10-gauge, 3.12 mm (0.123 in) high frequency hinge reinforcements, with a flange **[**7-gauge, 4.24 mm (0.167 in) flat hinge reinforcements**]**.
D. Strike reinforcement: 16-gauge, 1.34 mm (0.053 in) **[**12-gauge, 2.36 mm (0.093 in)**]**.
E. Closer reinforcement: 12-gauge, 2.36 mm (0.093 in).
F. Other reinforcements: 16-gauge, 1.34 mm (0.053 in) **[**12-gauge, 2.36 mm (0.093 in)**]**.

2.11. DOOR HARDWARE PREPARATION

A. Factory to prepare hollow metal door to receive template mortised hardware; include cut-outs, reinforcement, mortising, drilling, and tapping according to the Hardware manufacturer's instructions and templates.
B. Surface applied hardware: Factory reinforced only, 16-gauge, 1.34 mm (0.053 in).
C. Hinge and pivot reinforcements: 10-gauge, 3.12 mm (0.123 in) high frequency hinge reinforcements, with a flange **[**7-gauge, 4.24 mm (0.167 in) flat hinge reinforcements.
D. Lock front reinforcement: 12-gauge, 2.36 mm (0.093 in).
E. Flush bolt reinforcement: 12-gauge, 2.36 mm (0.093 in).
F. Closer reinforcement: 16-gauge, 1.34 mm (0.053 in).
G. Other reinforcements: 16-gauge, 1.34 mm (0.053 in).

2.12. FINISHING

A. Galvannealed steel A40/A60: Factory applied primer to protect the area where zinc was removed in the welding process.
B. Primer: Comply with ANSI A250.10.
C. Factory prefinished doors and frames: Comply with ANSI A250.3.
   1. Select color from manufacturer's standard color chart **as selected by owner**.
   2. Provide touch-up paint for field repairs

3. EXECUTION

3.1. EXAMINATION

A. Inspect rough openings to detect problems that would prevent the proper installation of doors and frames.
B. Rough openings shall be square, level and plumb with accurate dimensions.

3.2. INSTALLATION

A. Remove temporary spreaders on welded frames before installation and verify frame dimensions, swing, fire rating and opening number.
B. For grouted frames, apply on site a coat of bituminous coating inside the frame throat.
C. Install doors and frames in accordance with:
    1. Approved door and hardware schedule
    2. Approved shop drawings
    3. Manufacturer's recommendations
    4. Local building codes
    5. NFPA 80
    6. NFPA 105
    7. ANSI/DHI A115.1G
    8. NAAMM HMMA 840
D. Install STC assemblies per manufacturer's installation instructions.
E. Install Windstorm assemblies per manufacturer's installation instructions.

3.3. ADJUSTING, CLEANING AND PROTECTION

A. Repair or replace damaged products.
B. Correct defects in installation.
C. Clean area in accordance with Section 01 74 00.
D. Protect doors and frames until transfer of the building to the Owner.

3.4. INSPECTION

A. Inspection of fire rated openings
    1. Comply with NFPA 80 requirements.
    2. Fire door assemblies shall be inspected and tested by an individual with knowledge and understanding of the operating components of the type of door. This person must confirm the door assembly will perform its intended function when exposed to fire conditions.
    3. A report shall be written for the AHJ and shall be submitted to the Owner.
    4. All deficiencies must be corrected before turning keys to the Owner.

END OF THIS SECTION

HARRING DOORS
TEL: (888) 689-0683
FAX: (519) 644-2520

TO: KAMCO SUPPLY - LONDONDERRY

JOB: WEARE TOWN HALL

November 28, 2012 — Drawing 1

QUOTE #: T112812-1035

CUST P.O. #: PENDING — ORDER # PENDING

A110A - 10 PANEL

EXTERIOR - CUSTOM GRADE
W/ CUSTOM RAISED MOULDINGS BOTH SIDES

AND VERTICAL KERF IN INTERMEDIATE STILE

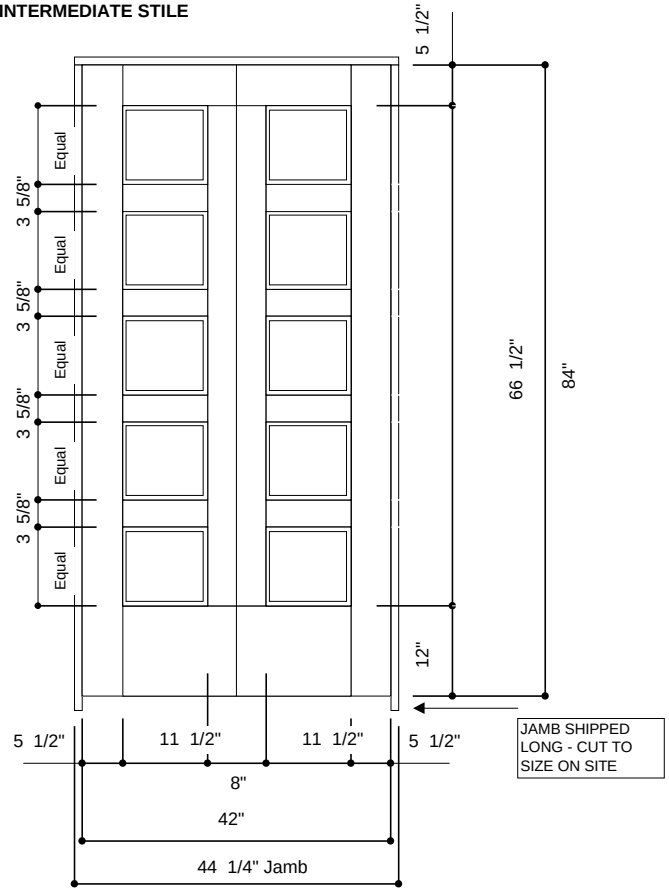

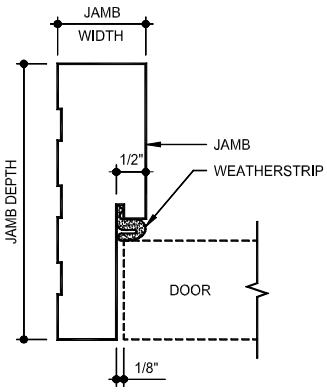

PROFILE DETAILS

CUSTOM PROFILE
CUTTER CHARGES MAY APPLY

(Bevel Info)	Hinge	Lock
	Yes	Yes

QUANTITY	THICKNESS
1	1 3/4 "

STILES/RAILS

AFR. MAHOGANY, PLAIN SLICE, HARRING STANDARD CONSTRUCTION

PANEL

5/8 " THICK FLAT PANEL, MDF

PREFINISH

FACTORY PRIME EXT

WARRANTY

3 YEAR LIMITED - FACTORY FINISH REQUIRED

JAMBS

1 1/2 X 6 3/4 " , AFR. MAHOGANY, PLAIN SLICE , SINGLE RABBETED, SHIPPED K.D., PREFINISH: FACTORY PRIME EXT

MACHINING SPECIFICATIONS

DESC.	MANUF.	TEMP#	PROD/FUNCT
HINGES			
EXIT DEVICE			

DOOR NUMBERS: **SWING**

APPROVED BY:

DATE:

NOTE: ALL UNDERCUTS ARE TAKEN OUT OF GLASS AND/OR PANEL SIZE UNLESS OTHERWISE SPECIFIED

HARRING DOORS
TEL: (888) 689-0683
FAX: (519) 644-2520

TO: KAMCO SUPPLY - LONDONDERRY

JOB: WEARE TOWN HALL

November 28, 2012 — Drawing 2

QUOTE #: T112812-1035

CUST P.O. #: PENDING — ORDER # PENDING

A305 - 5 LITE TRANSOM
EXTERIOR - CUSTOM GRADE

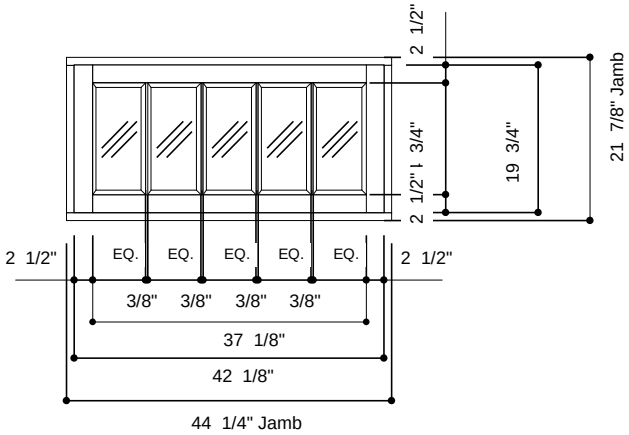

QUANTITY	THICKNESS
1	1 3/4 "

STILES/RAILS

AFR. MAHOGANY, PLAIN SLICE, HARRING STANDARD CONSTRUCTION

GLASS

5/8" CLEAR TEMP INSUL- LOGO ON EACH LITE

PREFINISH

FACTORY PRIME EXT

WARRANTY

3 YEAR LIMITED - FACTORY FINISH REQUIRED

JAMBS

1 1/2 X 6 3/4 " , AFR. MAHOGANY, PLAIN SLICE ,SINGLE RABBETED, SHIPPED K.D., PREFINISH: FACTORY PRIME EXT

MACHINING SPECIFICATIONS

DESC.	MANUF.	TEMP#	PROD/FUNCT
NO MACHINING REQUIRED			

DOOR NUMBERS: **SWING**

PROFILE DETAILS

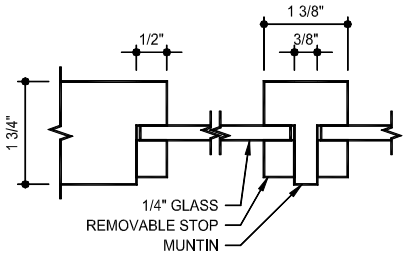

(Bevel Info)	Hinge	Lock
	No	No

APPROVED BY:

DATE:

NOTE: ALL UNDERCUTS ARE TAKEN OUT OF GLASS AND/OR PANEL SIZE UNLESS OTHERWISE SPECIFIED

DE LA FONTAINE
Imagine. We realize.

DOORS WITH

RECESSED PANELS

DOORS WITH

RECESSED PANELS

MADE-TO-MEASURE ELEGANCE

Let your imagination run free by creating your own model of door: Decide on the number of panels to embed as well as their size, add a molding of wood or aluminum to accent the relief, choose the pre-finishing color. And there you have it. You will have a unique door... a steel door which respects the most demanding of performance standards and is resistant to fire... a designer door which will harmoniously integrate into your project.

RECESSED PANELS

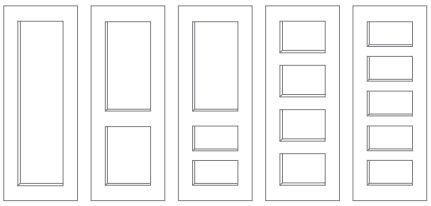

RDP 101 RDP 102 RDP 103 RDP 104 RDP 105

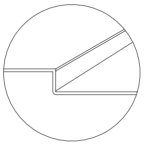

RECESSED PANEL

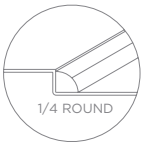

RECESSED PANEL WITH MOLDING

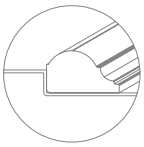

RECESSED PANEL WITH PROFILED MOLDING

EXAMPLES OF USE

- Hotels
- Office buildings
- Apartments, condominiums
- Residences for seniors
- Student residences
- Institutions

BENEFITS

- **Fire resistance approval**: Positive pressure UL 10C: Up to 180 minutes; British Standard (BS-476-22): Up to 120 minutes
- **Conforms to the American National Standards Institute** ANSI A250.4 standard
- Includes **materials with high recycled content**
- **The performance** of a commercial-grade steel door, moderate to maximum duty
- **Personalized** and exclusive **design**
- **Pre-finishing in factory:** Standard and custom colors

CHOICE OF DESIGN

- Recessed panels
- Recessed panels with moldings

MATERIALS

- **Door:** A40 and A60 galvannealed steel, 18, 16, 14-gauge
- **Moldings:** Hardwood, aluminum or steel

+1 819 821-9230 | 1 800 565-9230
www.delafontaine.com

VON DUPRIN®

98/99™ Series Exit Devices

IR Security & Safety
Proven Source. Proven Solutions.™

Finishes*

Color	US Number	BHMA Number
Chromium, Polished	US26	625
Anodized, Aluminum	US28	628
Chromium, Dull	US26D	626
Brass, Polished	US3	605
Brass, Dull	US4	606
Bronze, Dull	US10	612
Anodized Duranodic (Dark Bronze)	313AN	710
Anodized Black	315AN	—

Pushpad Options — Knurled
Embossed "Push"
Braille (Caution-Stairwell), satin stainless steel only
SS – (EMERGENCY EXIT – PUSH TO OPEN AND SOUND ALARM) – Red Silkscreen lettering on US32D

*** NOTE:** Durable powder coated finishes available at specific special request. PLEASE CONTACT FACTORY.

© 2004 Ingersoll-Rand. May be copied for use with specification submittal.

Index

Introduction . . . 3

Exit Hardware

- Rim Devices
  - 98/99™ Rim Exit Device . . . 4
  - 98/99™ Rim Exit Device Trim . . . 5
- Mortise Lock Device
  - 9875/9975 Mortise Lock Device . . . 8
  - 9875/9975 Mortise Lock Device Trim . . . 9
- Surface Mounted Vertical Rod Devices
  - 9827/9927 Surface Mounted Vertical Rod Device . . . 12
  - 9827/9927 Surface Mounted Vertical Rod Device Trim . . . 13
- Three-Point Latching Device
  - 9857/9957 Three-Point Latching Device . . . 16
  - 9857/9957 Three-Point Latching Device Trim . . . 17
- Concealed Vertical Rod Device
  - 9847/9947 Concealed Vertical Rod Device . . . 20
  - 9847/9947 Concealed Vertical Rod Device Trim . . . 21
  - 9848/9948 Concealed Vertical Rod Device . . . 24
  - 9848/9948 Concealed Vertical Rod Device Trim . . . 25
- Wood Door Concealed Vertical Rod Device
  - 9847/9947 Wood Door Concealed Vertical Rod Device . . . 28
  - 9847/9947 Wood Door Concealed Vertical Rod Device Trim . . . 29

Fire Exit Hardware

- Fire Exit Rim Devices
  - 98-F/99-F Rim Exit Device . . . 6
  - 98-F/99-F Rim Exit Device Trim . . . 7
- Fire Exit Mortise Lock Device
  - 9875-F/9975-F Fire Exit Mortise Lock Device . . . 10
  - 9875-F/9975-F Fire Exit Mortise Lock Device Trim . . . 11
- Fire Exit Surface Mounted Vertical Rod Devices
  - 9827-F/9927-F Surface Mounted Vertical Rod Device . . . 14
  - 9827-F/9927-F Surface Mounted Vertical Rod Device Trim . . . 15
- Fire Exit Three-Point Latching Device
  - 9857-F/9957-F Three-Point Latching Device . . . 18
  - 9857-F/9957-F Three-Point Latching Device Trim . . . 19
- Fire Exit Concealed Vertical Rod Devices
  - 9847-F/9947-F Concealed Vertical Rod Device . . . 22
  - 9847-F/9947-F Concealed Vertical Rod Device Trim . . . 23
  - 9848-F/9948-F Concealed Vertical Rod Device . . . 26
  - 9848-F/9948-F Concealed Vertical Rod Device Trim . . . 27
- Fire Exit Wood Door Concealed Vertical Rod Device
  - 9847-F/9947-F Wood Door Concealed Vertical Rod Device . . . 30
  - 9847-F/9947-F Wood Door Concealed Vertical Rod Device Trim . . . 31

Trim Selection

- Optional Trim . . . 32-34
- Lever Designs . . . 32
- Operation Options . . . 35
- HL Trim . . . 35
- Vandal Resistant Trim . . . 35
- CM993 and PRO993 Exit Trim . . . 36
- How To Order CM993 and PRO993 Exit Trim . . . 37

Strike Selection

- Strikes . . . 39
- Strike/Stile . . . 38

Index, pg. 2

Device Electrical Options
- EL Electric Latch Retraction . . . 43
- E - Electric Rim Device . . . 44
- E7500 Mortise Lock . . . 44
- Chexit . . . 45
- ALK Exit Alarm Kit . . . 42
- SS Signal Switch . . . 43
- LX Latch Bolt Monitoring . . . 42
- RX - Request to Exit . . . 42
- RX2 - Double Request to Exit . . . 42

Device Accessories
- Glass Bead Kit . . . 49
- Dummy Push Pad . . . 50
- Cylinders . . . 50
- Cover Plate Kit . . . 49
- RG-27 Vertical Rod and Latch Guard . . . 49

Device Options
- Braille, Embossed and Knurled Touchpads . . . 48
- Cylinder Dogging . . . 48
- CDK, HDK Cylinder Dogging and Hex Key Dogging Kits . . . 48
- Pnuematic Controlled Exit Device . . . 48
- Double Cylinder Exit Device . . . 48
- LBR, Less Bottom Rod . . . 49
- PL, Pullman Latch . . . 49

Device Electrical Accessories
- Power Supplies
  - PS9 . . . 47
  - PS861 . . . 47
  - PS873 . . . 46
- EPT Electric Power Transfer . . . 47

Additional Information
- ANSI Grade, Type & Function . . . 40
- Device Dimensions . . . 40
- UL Fire Labeling and Opening Size . . . 41
- Finishes . . . 52
- Handing . . . 50
- How-To-Order Information . . . 53
- Nomenclature . . . 53
- Popular Double Door Applications . . . 51

© 2004 Ingersoll-Rand. May be copied for use with specification submittal.

Introduction

Exit devices are a critical part of the Fire and Life Safety egress system and will provide safe and reliable service when properly applied and maintained. Von Duprin designs and manufactures exit devices in accordance to ISO 9001 Quality Management System and meets or exceeds accepted U.S. domestic and International standards. All 98 and 99 series exit devices are UL listed for Panic Hardware or Fire Hardware, and are certified to ANSI A156.3, 2001, Grade 1. Many models are also certified for Hurricane Resistant Applications. Consult your local IR Security & Safety consultant or the Von Duprin factory for current listings.

It is intended that the information included in this publication, when properly used, will provide clear and reliable guidelines to the proper general selection and application. However, the scope of the information is necessarily limited.

Unusual operating conditions and environments and other external influences can affect the proper application of the products represented. Modifications of these products will also affect UL listings. It is recommended that whenever an unusual application condition exists, or when any modification of a product is considered, that our engineers review the application.

Application engineering services are available to help ensure proper selection or to review any areas where users of Von Duprin products may have questions.

99 Series features grooved mechanism case.

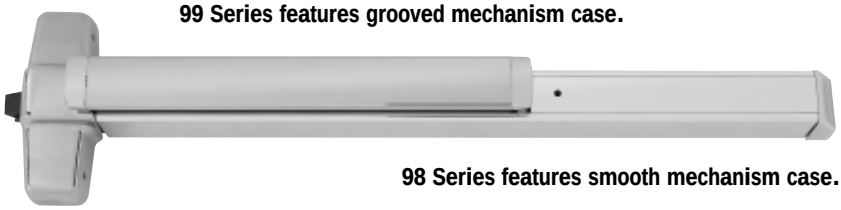

98 Series features smooth mechanism case.

Von Duprin push pad exit devices are available in two external surface styles, designated 98 Series and 99 Series.

The two styles are mechanically and dimensionally identical and provide a wide selection of appearance options.

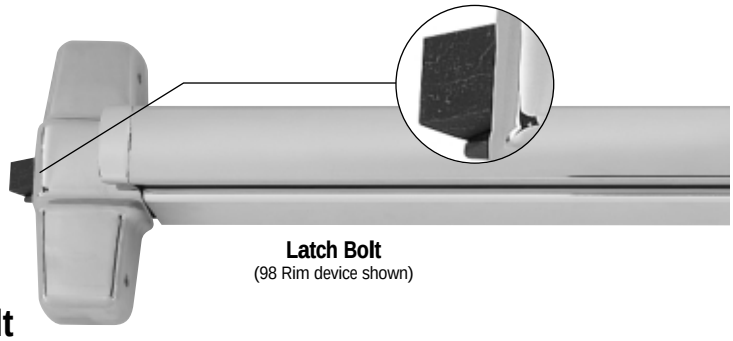

Latch Bolt
(98 Rim device shown)

Latch Bolt

Deadlocking latchbolt provides security and improved performance at standard device cost.

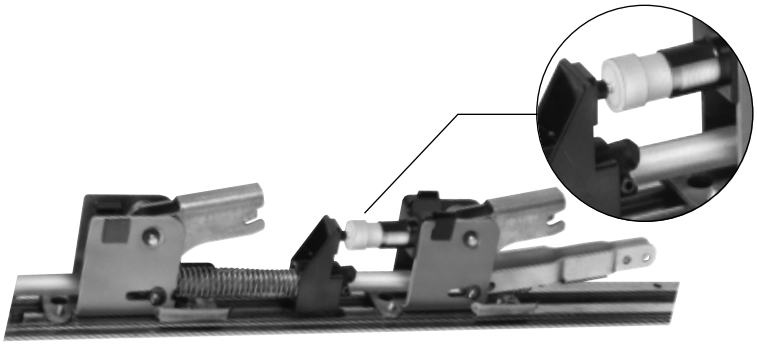

The Quiet One®

A fluid dampener decelerates the pushpad on its return stroke and eliminates most noise associated with exit device operations. Furnished on all 98/99™ series exit devices.

299 Strike

98 and 99 rim exit devices for all types of single and double doors with mullion, UL listed for Panic Exit Hardware. Devices are ANSI A156.3 – 2001 Grade 1. The 98 device has a smooth mechanism case and the 99 device has a grooved case. The rim device is non-handed except when the following device options are used: SD (Special Dogging), -2 (Double Cylinder) or SS (Signal Switch). See Opposite page for available outside trim and device functions. Covers stock hollow metal doors with 86 or 161 cutouts on single doors (may cover cutouts on pairs – consult template).

The 98/99 devices are available in the following finishes: US3, US4, US10, US26, US26D, US28, 313AN, 315AN and US32D for the 98 device only. See page 52 for component finishes and the inside cover for finish chips.

Specifications

Device Functions	Device ships EO/DT/NL. Field selectable. For TP,K,or L remove NL drive screw from device		
Device Lengths	3'	2'4" to 3' (711mm to 914 mm) Door Size	
	4'	2'10" to 4' (864 mm to 1219 mm) Door Size	
Strikes	299 – Dull Black Optional Strikes – see page 39		
Dogging Feature	Hex key dogging standard		
Dogging Options	CD	Cylinder Dogging	see page 48
	SD	Special Center Case Dogging	see page 48
	LD	Less Dogging	see page 48
Electric Options	LX	Latchbolt Monitor Switch	see page 42
	RX	Pushpad Monitor Switch	see page 42
	RX2	Double Pushpad Monitor Switch	see page 42
	E	Electric Locking & Unlocking	see page 44
	EL	Electric Latch Retraction	see page 43
	SS	Signal Switch	see page 43
	CX	Chexit Delayed Exit	see page 45
	ALK	Alarm Exit Kit	see page 42
Miscellaneous Options	PN	Pneumatic Latch Retraction	see page 48
	-2	Double Cylinder	see page 48
	GBK	Glass Bead Kit	see page 49
Fasteners & Sex Bolts (SNB)	Includes 1 ¾" (19mm) – 2 ¼" (57mm) Wood & Metal Doors Optional SNB available for device, see next page for quantities		
Latch Bolt	Deadlocking, ¾" (19mm) throw		
Device Centerline from Finished Floor	39 13⁄16" (1011 mm) 39 11⁄16" (1008 mm) with Mullion		
Center Case Dimensions	8" x 2 ¾" x 2 ⅜" (203mm x 70mm x 60mm)		
Mechanism Case Dimensions	2 ¼" x 2 ¼" (57mm x 57mm)		
Projection	Pushbar Neutral – 3 13⁄16" (97 mm) Pushbar Depressed – 3 1⁄16" (78 mm)		

See page 53 for How to Order specification

© 2004 Ingersoll-Rand. May be copied for use with specification submittal.

	Exit only	**Dummy Trim** Pull when Dogged 	**Night Latch** Key Retracts Latchbolt 	**Night Latch** Key Retracts Latchbolt Optional Pull Required
Product Description	98EO 99EO	98DT 99DT	98NL 99NL	98NL-OP 99NL-OP
Trim Description	—	990DT	990NL-R/V	110NL-MD 110NL-WD
Escutcheon Plate Size	—	3" x 14³⁄₁₆" x ³⁄₃₂" *(76x360x2mm)*	3" x 14³⁄₁₆" x ³⁄₃₂" *(76x360x2mm)*	—
Pull Center to Center	—	5½" *(140mm)*	5½" *(140mm)*	—
Projection	—	2" *(51mm)*	2" *(51mm)*	—
ANSI Function	01	02	03	03
Cylinder Type	—	—	Rim	Rim
Optional Trim (See pages 32 – 34)	x990EO x992EO x994EO x996EO	x991K-DT x992L-DT x994L-DT x996L-DT x696DT x697DT	x991K-NL x992L-NL x994L-NL x996L-NL x696NL x697NL	
Optional #425 Sex Bolt Quantity for Device	6	2	2	6

	Lever Key Locks & Unlocks 	**Lever – Night Latch** Key Retracts Latchbolt 	**Lever – Blank Escutcheon** Always operable (No Cylinder) 	**Lever Dummy Trim** Pull when Dogged
Product Description	98L 99L	98L-NL 99L-NL	98L-BE 99L-BE	98L-DT 99L-DT
Trim Description	996L-R/V	996L-NL-R/V	996L-BE-R/V	996L-DT-R/V
Escutcheon Plate Size	2¾" x 10¾" x ²⁷⁄₃₂" *(70x273x21mm)*	2¾" x 10¾" x ²⁷⁄₃₂" *(70x273x21mm)*	2¾" x 10¾" x ²⁷⁄₃₂" *(70x273x21mm)*	2¾" x 10¾" x ²⁷⁄₃₂" *(70x273x21mm)*
Pull Center to Center	—	—	—	—
Projection	2⁷⁄₈" *(73mm)*	2⁷⁄₈" *(73mm)*	2⁷⁄₈" *(73mm)*	2⁷⁄₈" *(73mm)*
ANSI Function	08	09	—	02
Cylinder Type	Rim	Rim	—	—
Optional Trim (See pages 32 – 34)	x992L x994L	x992L-NL x994L-NL	x992L-BE x994L-BE	x992L-DT x994L-DT
Optional #425 Sex Bolt Quantity for Device	2	2	2	2

For optional trims and functions see pages 32-34

299F Strike

499F Strike With 9854/9954 Mullion

98-F and 99-F rim fire exit devices for all types of single doors up to 4´ x 10´ *(1219mm x 3048mm)* or 8´ x 10´ *(2438mm x 3048mm)* double doors with 9954 or 9854 mullion, UL listed for Fire Exit Hardware. **See page 41 for detailed information on UL listed fire exit hardware label and door opening size information.** Devices are ANSI A156.3 – 2001 Grade 1. The 98-F device has a smooth mechanism case and the 99-F device has a grooved case. The rim device is non-handed except when the following device options are used: -2 (Double Cylinder) or SS (Signal Switch). See Opposite page for available outside trim and device functions.

The 98-F/99-F devices are available in the following finishes: US3, US4, US10, US26, US26D, US28, 313AN, 315AN and US32D for the 98-F device only. See page 52 for component finishes and the inside cover for finish chips.

Specifications

Device Functions	Device ships EO/DT/NL. Field selectable. For TP,K,or L remove NL drive screw from device		
Device Lengths	3'	2'4" to 3' (711mm to 914 mm) Door Size	
	4'	2'10" to 4' (864 mm to 1219 mm) Door Size	
Strikes	299F – Dull Black, 499F with Mullions Optional Strikes – see page 39		
Dogging Feature	No Mechanical Dogging, EL option available		
Electric Options	LX	Latchbolt Monitor Switch	see page 42
	RX	Pushpad Monitor Switch	see page 42
	RX2	Double Pushpad Monitor Switch	see page 42
	E	Electric Locking & Unlocking	see page 44
	EL	Electric Latch Retraction	see page 43
	SS	Signal Switch	see page 43
	CX	Chexit Delayed Exit	see page 45
	ALK	Alarm Exit Kit	see page 42
Miscellaneous Options	PN	Pneumatic Latch Retraction	see page 48
	-2	Double Cylinder	see page 48
	GBK	Glass Bead Kit	see page 49
Fasteners & Sex Bolts (SNB)	Includes 1 ¾" (19mm) – 2 ¼" (57mm) Wood & Metal Doors Optional SNB available for device, see next page for quantities Optional SLM Blocking Pkg for wood doors with SLM blocking SNB required for wood doors, unless SLM Blocking Pkg specified		
Latch Bolt	Deadlocking, ¾" (19mm) throw		
Device Centerline from Finished Floor	39 13⁄16" (1011 mm) 39 11⁄16" (1008 mm) with Mullion		
Center Case Dimensions	8" x 2 ¾" x 2 ⅜" (203mm x 70mm x 60mm)		
Mechanism Case Dimensions	2 ¼" x 2 ¼" (57mm x 57mm)		
Projection	Pushbar Neutral – 3 13⁄16" (97 mm) Pushbar Depressed – 3 1⁄16" (78 mm)		

See page 53 for How to Order specification

© 2004 Ingersoll-Rand. May be copied for use with specification submittal.

	Exit only	**Dummy Trim** Pull when Dogged (Not recommened for Fire Device) 	**Night Latch** Key Retracts Latchbolt 	**Night Latch** Key Retracts Latchbolt Optional Pull Required
Product Description	98EO-F 99EO-F	— —	98NL-F 99NL-F	98NL-OP-F 99NL-OP-F
Trim Description	—	990DT	990NL-R/V	110NL-MD 110NL-WD
Escutcheon Plate Size	—	3" x 14 3/16" x 3/32" *(76x360x2mm)*	3" x 14 3/16" x 3/32" *(76x360x2mm)*	—
Pull Center to Center	—	5½" *(140mm)*	5½" *(140mm)*	—
Projection	—	2" *(51mm)*	2" *(51mm)*	—
ANSI Function	01	02	03	03
Cylinder Type	—	—	Rim	Rim
Optional Trim (See pages 32 – 34)	x990EO x992EO x994EO x996EO	x991K-DT x992L-DT x994L-DT x996L-DT x696DT x697DT	x991K-NL x992L-NL x994L-NL x996L-NL x696NL x697NL	
#425 SNB optional-HMD Req. WD w/o SLM Pkg.	6	2	2	6
#825 SNB Req. WD w/o SLM Pkg.	2	2	2	2
#425 SNB Req. w/ 499F	2	2	2	2

	Lever Key Locks & Unlocks 	**Lever – Night Latch** Key Retracts Latchbolt 	**Lever – Blank Escutcheon** Always operable (No Cylinder) 	**Lever Dummy Trim** Pull when Dogged (Not recommened for Fire Device)
Product Description	98L-F 99L-F	98L-NL-F 99L-NL-F	98L-BE-F 99L-BE-F	— —
Trim Description	996L-R/V	996L-NL-R/V	996L-BE-R/V	996L-DT-R/V
Escutcheon Plate Size	2¾" x 10¾" x 27/32" *(70x273x21mm)*	2¾" x 10¾" x 27/32" *(70x273x21mm)*	2¾" x 10¾" x 27/32" *(70x273x21mm)*	2¾" x 10¾" x 27/32" *(70x273x21mm)*
Pull Center to Center	—	—	—	—
Projection	2⅞" *(73mm)*	2⅞" *(73mm)*	2⅞" *(73mm)*	2⅞" *(73mm)*
ANSI Function	08	09	—	02
Cylinder Type	Rim	Rim	—	—
Optional Trim (See pages 32 – 34)	x992L x994L	x992L-NL x994L-NL	x992L-BE x994L-BE	x992L-DT x994L-DT
#425 SNB optional-HMD Req. WD w/o SLM Pkg.	2	2	2	2
#825 SNB Req. WD w/o SLM Pkg.	2	2	2	2
#425 SNB Req. w/ 499F	2	2	2	2

For optional trims and functions see pages 32-34

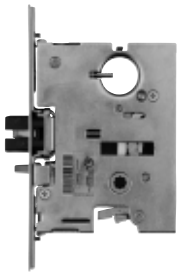

575 Strike

9875/9975 mortise lock device for all types of single or double doors, UL listed for Panic Exit Hardware. Devices are ANSI A156.3 – 2001 Grade 1. Fits stock hollow metal doors with 86 cutout and door stiles as narrow as 4 ¾" *(121mm).* The 9875 device has a smooth mechanism case and the 9975 device has a grooved case. The mortise lock device is non-handed except when the following device options are used: -2 (Double Cylinder) or SS (Signal Switch). See Opposite page for available outside trim and device functions.

The 9875/9975 devices are available in the following finishes: US3, US4, US10, US26, US26D, US28, 313AN, 315AN and US32D for the 9875 device only. See page 52 for component finishes and the inside cover for finish chips.

The 7500 Mortise lock is equipped with a ¾" *(19mm)* anti-friction latch bolt which is field reversible without removing the lock from the door. It has a non-handed auxiliary bolt for deadlocking and a faceplate with an adjustable bevel.

Specifications

Device Functions	Device ships EO/DT/NL. Field selectable. For TP,K,or L adjust NL drive screw in mortise lock		
Device Lengths	3'	2'4" to 3' (711mm to 914 mm) Door Size	
	4'	2'10" to 4' (864 mm to 1219 mm) Door Size	
Strikes	575 – Dull Black Optional Strikes – see page 39		
Dogging Feature	Hex key dogging standard		
Dogging Options	CD	Cylinder Dogging	see page 48
	LD	Less Dogging	see page 48
Electric Option	RX	Pushpad Monitor Switch	see page 42
	RX2	Double Pushpad Monitor Switch	see page 42
	E	Electric Locking & Unlocking	see page 44
	EL	Electric Latch Retraction	see page 43
	SS	Signal Switch	see page 43
	CX	Chexit Delayed Exit	see page 45
	ALK	Alarm Exit Kit	see page 42
Miscellaneous Options	PN	Pneumatic Latch Retraction	see page 48
	-2	Double Cylinder	see page 48
	GBK	Glass Bead Kit	see page 49
Fasteners & Sex Bolts (SNB)	Includes 1 ¾" (19mm) – 2 ¼" (57mm) Wood & Metal Doors Optional SNB available for device, see next page for quantities		
Device Centerline from Finished Floor	39 ⅝" (1006 mm)		
Center Case Dimensions	8" x 2 ¾" x 2 ⅜" (203mm x 70mm x 60mm)		
Mechanism Case Dimensions	2 ¼" x 2 ¼" (57mm x 57mm)		
Projection	Pushbar Neutral – 3 13/16" (97 mm) Pushbar Depressed – 3 1/16" (78 mm)		

See page 53 for How to Order specification

© 2004 Ingersoll-Rand. May be copied for use with specification submittal.

	Exit only	**Dummy Trim** Pull when Dogged	**Night Latch** Key Retracts Latchbolt	**Hospital Latch** Key Locks & Unlocks
Product Description	9875EO 9975EO	9875DT 9975DT	9875NL 9975NL	9875HL 9975HL
Trim Description	—	990DT	990NL-M	HL6M
Escutcheon Plate Size	—	3" x 14³⁄₁₆" x ³⁄₃₂" *(76x360x2mm)*	3" x 14³⁄₁₆" x ³⁄₃₂" *(76x360x2mm)*	2⁹⁄₁₆" x 5½" x 2⅝" *(65x140x67mm)*
Pull Center to Center	—	5½" *(140mm)*	5½" *(140mm)*	—
Projection	—	2" *(51mm)*	2" *(51mm)*	2⅝" *(67mm)*
ANSI Function	01	02	03	—
Cylinder Type	—	—	1¼" Mortise	1¼" Mortise
Optional Trim (See pages 32 – 34)	x990EO x992EO x994EO x996EO	x991K-DT x992L-DT x994L-DT x996L-DT x696DT x697DT	x991K-NL x992L-NL x994L-NL x996L-NL x696NL x697NL	
Optional #425 Sex Bolt Quantity for Device	6	2	2	2

	Lever Key Locks & Unlocks	**Lever – Night Latch** Key Retracts Latchbolt	**Lever – Blank Escutceon** Always operable (No Cylinder)	**Lever Dummy Trim** Pull when Dogged
Product Description	9875L 9975L	9875L-NL 9975L-NL	9875L-BE 9975L-BE	9875L-DT 9975L-DT
Trim Description	996L-M	996L-NL-M	996L-BE-M	996L-DT-M
Escutcheon Plate Size	2¾" x 10¾" x ²⁷⁄₃₂" *(70x273x21mm)*	2¾" x 10¾" x ²⁷⁄₃₂" *(70x273x21mm)*	2¾" x 10¾" x ²⁷⁄₃₂" *(70x273x21mm)*	2¾" x 10¾" x ²⁷⁄₃₂" *(70x273x21mm)*
Pull Center to Center	—	—	—	—
Projection	2⅞" *(73mm)*	2⅞" *(73mm)*	2⅞" *(73mm)*	2⅞" *(73mm)*
ANSI Function	08	09	—	02
Cylinder Type	1¼" Mortise	1¼" Mortise	—	—
Optional Trim (See pages 32 – 34)	x992L x994L	x992L-NL x994L-NL	x992L-BE x994L-BE	x992L-DT x994L-DT
Optional #425 Sex Bolt Quantity for Device	2	2	2	2

For optional trims and functions see pages 32-34

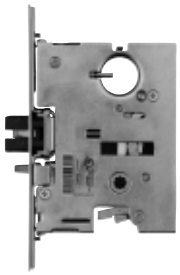

575 Strike

9875-F/9975-F fire exit mortise lock devices for all types of single doors up to 4´ x 10´ *(1219mm x 3048mm)* or 8´ x 10´ *(2438mm x 3048mm)* double doors installations, UL listed for Fire Exit Hardware; **See page 41 for detailed information on UL listed fire exit hardware label and door opening size information.** Devices are ANSI A156.3 – 2001 Grade 1. Fits door stiles as narrow as 4 ¾" *(121mm).* The 9875-F device has a smooth mechanism case and the 9975-F device has a grooved case. The mortise lock device is non-handed except when the following device options are used: -2 (Double Cylinder) or SS (Signal Switch) devices. See Opposite page for available outside trim and functions.

The 9875-F/9975-F devices are available in the following finishes: US3, US4, US10, US26, US26D, US28, 313AN, 315AN and US32D for the 9875-F device only. See page 52 for component finishes and the inside cover for finish chips.

The 7500 Mortise lock is equipped with a ¾" *(19mm)* anti-friction latch bolt which is field reversible without removing the lock from the door. It has a non-handed auxiliary bolt for deadlocking and a faceplate with an adjustable bevel.

Specifications

Device Functions	Device ships EO/DT/NL. Field selectable. For TP,K,or L remove NL drive screw from device		
Device Lengths	3'	2'4" to 3' (711mm to 914 mm) Door Size	
	4'	2'10" to 4' (864 mm to 1219 mm) Door Size	
Strikes	575 – Dull Black		
	Optional Strikes – see page 39		
Dogging Feature	No Mechanical Dogging, EL option available		
Electric Options	RX	Pushpad Monitor Switch	see page 42
	RX2	Double Pushpad Monitor Switch	see page 42
	E	Electric Locking & Unlocking	see page 44
	EL	Electric Latch Retraction	see page 43
	SS	Signal Switch	see page 43
	CX	Chexit Delayed Exit	see page 45
	ALK	Alarm Exit Kit	see page 42
Miscellaneous Options	PN	Pneumatic Latch Retraction	see page 48
	-2	Double Cylinder	see page 48
	GBK	Glass Bead Kit	see page 49
Fasteners & Sex Bolts (SNB)	Includes 1 ¾" (19mm) – 2 ¼" (57mm) Wood & Metal Doors		
	Optional SNB available for device, see next page for quantities		
	Optional SLM Blocking Pkg for wood doors with SLM blocking		
	SNB required for wood doors, unless SLM Blocking Pkg. specified		
Device Centerline from Finished Floor	39 ⅝" (1006 mm)		
Center Case Dimensions	8" x 2 ¾" x 2 ⅜" (203mm x 70mm x 60mm)		
Mechanism Case Dimensions	2 ¼" x 2 ¼" (57mm x 57mm)		
Projection	Pushbar Neutral – 3 13/16" (97 mm)		
	Pushbar Depressed – 3 1/16" (78 mm)		

See page 53 for How to Order specification

© 2004 Ingersoll-Rand. May be copied for use with specification submittal.

	Exit only	**Dummy Trim** Pull when Dogged (Not recommened for Fire Device) 	**Night Latch** Key Retracts Latchbolt 	**Hospital Latch** Key Locks & Unlocks
Product Description	9875EO-F 9975EO-F	— —	9875NL-F 9975NL-F	9875HL-F 9975HL-F
Trim Description	—	990DT	990NL-R/V	HL6M
Escutcheon Plate Size	—	3" x 14 3/16" x 3/32" *(76x360x2mm)*	3" x 14 3/16" x 3/32" *(76x360x2mm)*	2 9/16" x 5 1/2" x 2 5/8" *(65x140x67mm)*
Pull Center to Center	—	5 1/2" *(140mm)*	5 1/2" *(140mm)*	—
Projection	—	2" *(51mm)*	2" *(51mm)*	2 5/8" *(67mm)*
ANSI Function	01	02	03	—
Cylinder Type	—	—	1 1/4" Mortise	1 1/4" Mortise
Optional Trim (See pages 32 – 34)	x990EO x992EO x994EO x996EO	x991K-DT x992L-DT x994L-DT x996L-DT x696DT x697DT	x991K-NL x992L-NL x994L-NL x996L-NL x696NL x697NL	
#425 SNB optional-HMD Req. WD w/o SLM Pkg.	6	2	2	2

	Lever Key Locks & Unlocks 	**Lever – Night Latch** Key Retracts Latchbolt 	**Lever – Blank Escutcheon** Always operable (No Cylinder) 	**Lever Dummy Trim** Pull when Dogged (Not recommended for Fire Device)
Product Description	9875L-F 9975L-F	9875L-NL-F 9975L-NL-F	9875L-BE-F 9975L-BE-F	— —
Trim Description	996L-M	996L-NL-M	996L-BE-M	996L-DT-M
Escutcheon Plate Size	2 3/4" x 10 3/4" x 27/32" *(70x273x21mm)*	2 3/4" x 10 3/4" x 27/32" *(70x273x21mm)*	2 3/4" x 10 3/4" x 27/32" *(70x273x21mm)*	2 3/4" x 10 3/4" x 27/32" *(70x273x21mm)*
Pull Center to Center	—	—	—	—
Projection	2 7/8" *(73mm)*	2 7/8" *(73mm)*	2 7/8" *(73mm)*	2 7/8" *(73mm)*
ANSI Function	08	09	—	02
Cylinder Type	1 1/4" Mortise	1 1/4" Mortise	—	—
Optional Trim (See pages 32 – 34)	x992L x994L	x992L-NL x994L-NL	x992L-BE x994L-BE	x992L-DT x994L-DT
#425 SNB optional-HMD Req. WD w/o SLM Pkg.	2	2	2	2

For optional trims and functions see pages 32-34

299 Top Strike

248L4
Bottom Strike
for use with
flat threshold

304L
Bottom Strike

Top Latch

Bottom Latch

9827/9927 surface mounted vertical rod device for all types of single or double doors, UL listed for Panic Exit Hardware. Devices are ANSI A156.3 – 2001 Grade 1. Covers stock hollow metal doors with 86 or 161 cutouts. The 9827 device has a smooth mechanism case and the 9927 device has a grooved case. The surface vertical rod device is non-handed except when the following device options are used: SD (Special Dogging), or SS (Signal Switch). See Opposite page for available outside trim and functions.

The 9827/9927 devices are available in the following finishes: US3, US4, US10, US26, US26D, US28, 313AN, 315AN and US32D for the 9827 device only. See page 52 for component finishes and the inside cover for finish chips.

Vertical rod and latch guards are available to protect the bottom rod of the exit device from damage by impacts of carts or gurneys passing through doors. ***Refer to page 49***

Specifications

Device Functions	Device ships EO/DT/NL. Field selectable. For TP,K,or L remove NL drive screw from device		
Device Lengths	3'	2'4" to 3' (711mm to 914 mm) Door Size	
	4'	2'10" to 4' (864 mm to 1219 mm) Door Size	
Strikes	Top - 299 – Dull Black, Bottom – 248L4 & 304L - Unfinished Optional Strikes – see page 39		
Dogging Feature	Hex key dogging standard		
Dogging Options	CD	Cylinder Dogging	see page 48
	SD	Special Center Case Dogging	see page 48
	LD	Less Dogging	see page 48
Electric Options	LX	Latchbolt Monitor Switch	see page 42
	RX	Pushpad Monitor Switch	see page 42
	RX2	Double Pushpad Monitor Switch	see page 42
	EL	Electric Latch Retraction	see page 43
	SS	Signal Switch	see page 43
	CX	Chexit Delayed Exit	see page 45
	ALK	Alarm Exit Kit	see page 42
Miscellaneous Options	PN	Pneumatic Latch Retraction	see page 48
	LBR	Less Bottom Rod	see page 49
	GBK	Glass Bead Kit	see page 49
	PL	Pullman Latch	see page 49
Fasteners & Sex Bolts (SNB)	Includes 1 ¾" (19mm) – 2 ¼" (57mm) Wood & Metal Doors SNB furnished for top & bottom latches Optional SNB available for device, see next page for quantities		
Latch Bolt	Deadlocking Anti-friction Top & Bottom Bolt, ⅝ " (16mm) throw		
Device Centerline from Finished Floor	39 ⅝" (1006 mm)		
Door Undercut	¼" (7mm)		
Center Case Dimensions	8" x 2 ¾" x 2 ⅜" (203mm x 70mm x 60mm)		
Mechanism Case Dimensions	2 ¼" x 2 ¼" (57mm x 57mm)		
Top & Bottom Latch Case	4 ½" x 2 ⅛" x 1 ½" (114mm x 54mm x 38mm)		
Vertical Rods	½" square tubing, standard rods accommodate 7' (2134mm) door Top rod length is 34 15/16" (887mm) Bottom rod length is 31 ¼" (794mm) Extension rods available, 1' (205mm) or 3' (914mm) for doors over 7' One piece top rod available for 8' (2438mm) – 10' (3048mm) door		
Projection	Pushbar Neutral – 3 13/16" (97 mm) Pushbar Depressed – 3 1/16" (78 mm)		

See page 53 for How to Order specification

© 2004 Ingersoll-Rand. May be copied for use with specification submittal.

9827/9927 Surface Mounted Vertical Rod Device Standard Trim

	Exit only	**Dummy Trim** Pull when Dogged	**Night Latch** Key Retracts Latchbolt	**Night Latch** Key Retracts Latchbolt Optional Pull Required	**Thumbturn** Key Locks & Unlocks (Use with DT Trim)	**Thumbturn** Blank Escutcheon Always Operable (No Cylinder) (Use with DT Trim)
Product Description	9827EO 9927EO	9827DT 9927DT	9827NL 9927NL	9827NL-OP 9927NL-OP	9827TL 9927TL	9827TL-BE 9927TL-BE
Trim Description	—	990DT	990NL-R/V	110NL-MD 110NL-WD	374T x 990DT	374T-BE x 990DT
Escutcheon Plate Size	—	3" x 14 3/16" x 3/32" *(76x360x2mm)*	3" x 14 3/16" x 3/32" *(76x360x2mm)*	—	2 9/16" x 5 1/2" x 2 5/8" *(65x140x67mm)*	2 3/4" x 10 3/4" x 27/32" *(70x273x21mm)*
Pull Center to Center	—	5 1/2" *(140mm)*	5 1/2" *(140mm)*	—	—	—
Projection	—	2" *(51mm)*	2" *(51mm)*	—	3 1/4" *(83mm)*	3 1/4" *(83mm)*
ANSI Function	01	02	03	03	11	—
Cylinder Type	—	—	Rim	Rim	1 1/4" Mortise	—
Optional Trim (See pages 32 – 34)	x990EO x992EO x994EO x996EO	x991K-DT x992L-DT x994L-DT x996L-DT x696DT x697DT	x991K-NL x992L-NL x994L-NL x996L-NL x696NL x697NL			
Optional #425 Sex Bolt Quantity for Device	6	2	2	6	2	2

	Lever Key Locks & Unlocks	**Lever – Night Latch** Key Retracts Latchbolt	**Lever – Blank Escutcheon** Always operable (No Cylinder)	**Lever Dummy Trim** Pull when Dogged
Product Description	9827L 9927L	9827L-NL 9927L-NL	9827L-BE 9927L-BE	9827L-DT 9927L-DT
Trim Description	996L-R/V	996L-NL-R/V	996L-BE-R/V	996L-DT-RV
Escutcheon Plate Size	2 3/4" x 10 3/4" x 27/32" *(70x273x21mm)*	2 3/4" x 10 3/4" x 27/32" *(70x273x21mm)*	2 3/4" x 10 3/4" x 27/32" *(70x273x21mm)*	2 3/4" x 10 3/4" x 27/32" *(70x273x21mm)*
Pull Center to Center	—	—	—	—
Projection	2 7/8" *(73mm)*	2 7/8" *(73mm)*	2 7/8" *(73mm)*	2 7/8" *(73mm)*
ANSI Function	08	09	—	02
Cylinder Type	Rim	Rim	—	—
Optional Trim (See pages 32 – 34)	x992L x994L	x992L-NL x994L-NL	x992L-BE x994L-BE	x992L-DT x994L-DT
Optional #425 Sex Bolt Quantity for Device	2	2	2	2

For optional trims and functions see pages 32-34

299F
Top Strike

304L
Bottom Strike

499F
Top Strike - LBR

Top Latch

Bottom Latch

9827-F/9927-F fire exit surface mounted vertical rod device pairs of doors up to 8´ x 10´ *(2438mm x 3048mm)* , UL listed for Fire Exit Hardware.**See page 41 for detailed information on UL listed fire exit hardware label and door opening size information.** Devices are ANSI A156.3 – 2001 Grade 1. The 9827-F device has a smooth mechanism case and the 9927-F device has a grooved case. The surface vertical rod device is non-handed except when the following device options are used: SS (Signal Switch). See Opposite page for available outside trim and device functions.

The 9827-F/9927-F devices are available in the following finishes: US3, US4, US10, US26, US26D, US28, 313AN, 315AN and US32D for the 9827-F device only. See page 52 for component finishes and the inside cover for finish chips.

Vertical rod and latch guards are available to protect the bottom rod of the exit device from damage by impacts of carts or gurneys passing through doors. Rod and latch guards can be used on hollow metal or tin clad composite fire doors. ***Refer to page 49***

Specifications

Device Functions	Device ships EO/DT/NL. Field selectable. For TP,K,or L remove NL drive screw from device
Device Lengths	3' 2'4" to 3' (711mm to 914 mm) Door Size 4' 2'10" to 4' (864 mm to 1219 mm) Door Size
Strikes	Top – 299F (499F LBR) – Dull Black, Bottom – 304L - Unfinished Optional Strikes – see page 39
Dogging Feature	No Mechanical Dogging, EL option available
Electric Options	LX Latchbolt Monitor Switch see page 42 RX Pushpad Monitor Switch see page 42 RX2 Double Pushpad Monitor Switch see page 42 EL Electric Latch Retraction see page 43 SS Signal Switch see page 43 CX Chexit Delayed Exit see page 45 ALK Alarm Exit Kit see page 42
Miscellaneous Options	PN Pneumatic Latch Retraction see page 48 **LBR Less Bottom Rod see page 49** GBK Glass Bead Kit see page 49
Fasteners & Sex Bolts (SNB)	Includes 1 ¾" (19mm) – 2 ¼" (57mm) Wood & Metal Doors SNB furnished for top & bottom latches Optional SNB available for device, see next page for quantities Optional SLM Blocking Pkg for wood doors with SLM blocking SNB required for wood doors, unless SLM Blocking Pkg specified
Latch Bolt	Deadlocking Anti-friction Top & Bottom Bolt, ⅝ " (16mm) throw
Device Centerline from Finished Floor	39 ⅝" (1006 mm)
Door Undercut	¼" (7mm)
Center Case Dimensions	8" x 2 ¾" x 2 ⅜" (203mm x 70mm x 60mm)
Mechanism Case Dimensions	2 ¼" x 2 ¼" (57mm x 57mm)
Top & Bottom Latch Case	4 ½" x 2 ⅛" x 1 ½" (114mm x 54mm x 38mm)
Vertical Rods	½" square tubing, standard rods accommodate 7' (2134mm) door Top rod length is 34 15⁄16" (887mm) Bottom rod length is 31 ¼" (794mm) Extension rods available, 1' (205mm) or 3' (914mm) for doors over 7' One piece top rod available for 8' (2438mm) – 10' (3048mm) door
Projection	Pushbar Neutral – 3 13⁄16" (97 mm) Pushbar Depressed – 3 1⁄16" (78 mm)

See page 53 for How to Order specification

© 2004 Ingersoll-Rand. May be copied for use with specification submittal.

9827-F/9927-F Surface Mounted Vertical Rod Fire Device
Standard Trim

	Exit only	**Dummy Trim** Pull when Dogged (Not recommended for Fire Device) 	**Night Latch** Key Retracts Latchbolt 	**Night Latch** Key Retracts Latchbolt Optional Pull Required 	**Thumbturn** Key Locks & Unlocks (Use with DT Trim) 	**Thumbturn** Blank Escutcheon Always Operable (No Cylinder) (Use with DT Trim)
Product Description	9827EO-F 9927EO-F	— —	9827NL-F 9927NL-F	9827NL-OP-F 9927NL-OP-F	9827TL-F 9927TL-F	9827TL-BE-F 9927TL-BE-F
Trim Description	—	990DT	990NL-R/V	110NL-MD 110NL-WD	374T x 990DT	374T-BE x 990DT
Escutcheon Plate Size	—	3" x 14 3/16" x 3/32" *(76x360x2mm)*	3" x 14 3/16" x 3/32" *(76x360x2mm)*	—	2 3/4" x 10 3/4" x 27/32" *(70x273x21mm)*	2 3/4" x 10 3/4" x 27/32" *(70x273x21mm)*
Pull Center to Center	—	5 1/2" *(140mm)*	5 1/2" *(140mm)*	—	—	—
Projection	—	2" *(51mm)*	2" *(51mm)*	—	3 1/4" *(83mm)*	3 1/4" *(83mm)*
ANSI Function	01	02	03	03	11	—
Cylinder Type	—	—	Rim	Rim	1 1/4" Mortise	—
Optional Trim (See pages 32 – 34)	x990EO x992EO x994EO x996EO	x991K-DT x992L-DT x994L-DT x996L-DT x696DT x697DT	x991K-NL x992L-NL x994L-NL x996L-NL x696NL x697NL			
#425 SNB optional-HMD Req. WD w/o SLM Pkg.	6	2	2	6	2	2

	Lever Key Locks & Unlocks 	**Lever – Night Latch** Key Retracts Latchbolt 	**Lever – Blank Escutcheon** Always operable (No Cylinder) 	**Lever Dummy Trim** Pull when Dogged (Not recommended for Fire Device)
Product Description	9827L-F 9927L-F	9827L-NL-F 9927L-NL-F	9827L-BE-F 9927L-BE-F	— —
Trim Description	996L-R/V	996L-NL-R/V	996L-BE-R/V	996L-DT-RV
Escutcheon Plate Size	2 3/4" x 10 3/4" x 27/32" *(70x273x21mm)*	2 3/4" x 10 3/4" x 27/32" *(70x273x21mm)*	2 3/4" x 10 3/4" x 27/32" *(70x273x21mm)*	2 3/4" x 10 3/4" x 27/32" *(70x273x21mm)*
Pull Center to Center	—	—	—	—
Projection	2 7/8" *(73mm)*	2 7/8" *(73mm)*	2 7/8" *(73mm)*	2 7/8" *(73mm)*
ANSI Function	08	09	—	02
Cylinder Type	Rim	Rim	—	—
Optional Trim (See pages 32 – 34)	x992L x994L	x992L-NL x994L-NL	x992L-BE x994L-BE	x992L-DT x994L-DT
#425 SNB optional-HMD Req. WD w/o SLM Pkg.	2	2	2	2

For optional trims and functions see pages 32-34

299
Top & Middle Strike

248L4
Bottom Strike for use with threshold

304L
Bottom Strike

Top Latch

Bottom Latch

9857/9957 three-point latching device for all types of single or double doors, UL listed for Panic Exit Hardware. Devices are ANSI A156.3 – 2001 Grade 1. Covers stock hollow metal doors with 86 or 161 cutouts. The 9857 device has a smooth mechanism case and the 9957 device has a grooved case. The three-point latching device is non-handed except when the following device options are used: SD (Special Dogging), or SS (Signal Switch). See Opposite page for available outside trim and functions.

The 9857/9957 devices are available in the following finishes: US3, US4, US10, US26, US26D, US28, 313AN, 315AN and US32D for the 9857 device only. See page 52 for component finishes and the inside cover for finish chips.

Vertical rod and latch guards are available to protect the bottom rod of the exit device from damage by impacts of carts or gurneys passing through doors. ***Refer to Page 49.***

Specifications

Device Functions	Device ships EO/DT/NL. Field selectable. For TP,K,or L remove NL drive screw from device		
Device Lengths	3'	2'4" to 3' (711mm to 914 mm) Door Size	
	4'	2'10" to 4' (864 mm to 1219 mm) Door Size	
Strikes	Top & Middle-299–Dull Black, Bottom–248L4 & 304L-Unfinished Optional Strikes – see page 39		
Dogging Feature	Hex key dogging standard		
Dogging Options	CD	Cylinder Dogging	see page 48
	SD	Special Center Case Dogging	see page 48
	LD	Less Dogging	see page 48
Electric Options	LX	Latchbolt Monitor Switch	see page 42
	RX	Pushpad Monitor Switch	see page 42
	RX2	Double Pushpad Monitor Switch	see page 42
	EL	Electric Latch Retraction	see page 43
	SS	Signal Switch	see page 43
	CX	Chexit Delayed Exit	see page 45
	ALK	Alarm Exit Kit	see page 42
Miscellaneous Options	PN	Pneumatic Latch Retraction	see page 48
	LBR	Less Bottom Rod	see page 49
	GBK	Glass Bead Kit	see page 49
Fasteners & Sex Bolts (SNB)	Includes 1 ¾" (19mm) – 2 ¼" (57mm) Wood & Metal Doors SNB furnished for top & bottom latches Optional SNB available for device, see next page for quantities		
Latch Bolt	Deadlocking Anti-friction Top & Bottom Bolt, ⅝" (16mm) throw Deadlocking Rim Bolt, ¾" (19mm) throw		
Device Centerline from Finished Floor	39 13⁄16" (1011 mm)		
Door Undercut	¼" (7mm)		
Center Case Dimensions	8" x 2 ¾" x 2 ⅜" (203mm x 70mm x 60mm)		
Mechanism Case Dimensions	2 ¼" x 2 ¼" (57mm x 57mm)		
Top & Bottom Latch Case	4 ½" x 2 ⅛" x 1 ½" (114mm x 54mm x 38mm)		
Vertical Rods	½" square tubing, standard rods accommodate 7' (2134mm) door Top rod length is 34 15⁄16" (887mm) Bottom rod length is 31 ¼" (794mm) Extension rods available, 1' (205mm) or 3' (914mm) for doors over 7' One piece top rod available for 8' (2438mm) – 10' (3048mm) door		
Projection	Pushbar Neutral – 3 13⁄16" (97 mm) Pushbar Depressed – 3 1⁄16" (78 mm)		

See page 53 for How to Order specification

© 2004 Ingersoll-Rand. May be copied for use with specification submittal.

	Exit only	**Dummy Trim** Pull when Dogged	**Night Latch** Key Retracts Latchbolt	**Night Lacth** Key Retracts Latchbolt Optional Pull Required	**Thumbturn** Key Locks & Unlocks (Use with DT Trim)	**Thumbturn** Blank Escutcheon Always Operable (No Cylinder) (Use with DT Trim)
Product Description	9857EO 9957EO	9857DT 9957DT	9857NL 9957NL	9857NL-OP 9957NL-OP	9857TL 9957TL	9857TL-BE 9957TL-BE
Trim Description	—	990DT	990NL-R/V	110NL-MD 110NL-WD	374T x 990DT	374T-BE x 990DT
Escutcheon Plate Size	—	3" x 14 3/16" x 3/32" *(76x360x2mm)*	3" x 14 3/16" x 3/32" *(76x360x2mm)*	—	2 3/4" x 10 3/4" x 27/32" *(70x273x21mm)*	2 3/4" x 10 3/4" x 27/32" *(70x273x21mm)*
Pull Center to Center	—	5½" *(140mm)*	5½" *(140mm)*	—	—	—
Projection	—	2" *(51mm)*	2" *(51mm)*	—	3¼" *(83mm)*	3¼" *(83mm)*
ANSI Function	01	02	03	03	11	—
Cylinder Type	—	—	Rim	Rim	1¼" Mortise	—
Optional Trim (See pages 32 – 34)	x990EO x992EO x994EO x996EO	x991K-DT x992L-DT x994L-DT x996L-DT x696DT x697DT	x991K-NL x992L-NL x994L-NL x996L-NL x696NL x697NL			
Optional #425 Sex Bolt Quantity for Device	6	2	2	6	2	2

	Lever Key Locks & Unlocks	**Lever – Night Latch** Key Retracts Latchbolt	**Lever – Blank Escutcheon** Always operable (No Cylinder)	**Lever Dummy Trim** Pull when Dogged
Product Description	9857L 9957L	9857L-NL 9957L-NL	9857L-BE 9957L-BE	9857L-DT 9957L-DT
Trim Description	996L-R/V	996L-NL-R/V	996L-BE-R/V	996L-DT-RV
Escutcheon Plate Size	2 3/4" x 10 3/4" x 27/32" *(70x273x21mm)*	2 3/4" x 10 3/4" x 27/32" *(70x273x21mm)*	2 3/4" x 10 3/4" x 27/32" *(70x273x21mm)*	2 3/4" x 10 3/4" x 27/32" *(70x273x21mm)*
Pull Center to Center	—	—	—	—
Projection	2 7/8" *(73mm)*	2 7/8" *(73mm)*	2 7/8" *(73mm)*	2 7/8" *(73mm)*
ANSI Function	08	09	—	02
Cylinder Type	Rim	Rim	—	—
Optional Trim (See pages 32 – 34)	x992L x994L	x992L-NL x994L-NL	x992L-BE x994L-BE	x992L-DT x994L-DT
Optional #425 Sex Bolt Quantity for Device	2	2	2	2

For optional trims and functions see pages 32-34

299F
Top & Middle
Strike

304L
Bottom Strike

499F
Rim Strike
For Mullion
Applications

Top Latch

Bottom Latch

9857-F/9957-F fire exit three-point latching device for all types of single doors up to 4´ x 8´ *(1219mm x 2438mm)* or up to 8´ x 8´*(2438mm x 2438mm)* double doors with 9954 or 9854 mullion, UL listed for Fire Exit Hardware. **See page 41 for detailed information on UL listed fire exit hardware label and door opening size information.** Devices are ANSI A156.3 – 2001 Grade 1. The 9857-F device has a smooth mechanism case and the 9957-F device has a grooved case. The three-point latch device is non-handed except when the following device option is used: SS (Signal Switch). See Opposite page for available outside trim and device functions.

The 9857-F/9957-F devices are available in the following finishes: US3, US4, US10, US26, US26D, US28, 313AN, 315AN and US32D for the 9827-F device only. See page 52 for component finishes and the inside cover for finish chips.

Vertical rod and latch guards are available to protect the bottom rod of the exit device from damage by impacts of carts or gurneys passing through doors. ***Refer to Page 49.***

Specifications

Device Functions	Device ships EO/DT/NL. Field selectable. For TP,K,or L remove NL drive screw from device
Device Lengths	3' 2'4" to 3' (711mm to 914 mm) Door Size 4' 2'10" to 4' (864 mm to 1219 mm) Door Size
Strikes	Top & Middle-299F–Dull Black, Bottom–304L-Unfinished Optional Strikes – see page 39
Dogging Feature	No Mechanical Dogging, EL option available
Electric Options	LX Latchbolt Monitor Switch see page 42 RX Pushpad Monitor Switch see page 42 RX2 Double Pushpad Monitor Switch see page 42 EL Electric Latch Retraction see page 43 SS Signal Switch see page 43 CX Chexit Delayed Exit see page 45 ALK Alarm Exit Kit see page 42
Miscellaneous Options	PN Pneumatic Latch Retraction see page 48 GBK Glass Bead Kit see page 49
Fasteners & Sex Bolts (SNB)	Includes 1 ¾" (19mm) – 2 ¼" (57mm) Wood & Metal Doors SNB furnished for top & bottom latches Optional SNB available for device, see next page for quantities Optional SLM Blocking Pkg for wood doors with SLM blocking SNB required for wood doors, unless SLM Blocking Pkg specified
Latch Bolt	Deadlocking Anti-friction Top & Bottom Bolt, ⅝" (16mm) throw Deadlocking Rim Bolt, ¾" (19mm) throw
Device Centerline from Finished Floor	39 13⁄16" (1011 mm)
Door Undercut	¼" (7mm)
Center Case Dimensions	8" x 2 ¾" x 2 ⅜" (203mm x 70mm x 60mm)
Mechanism Case Dimensions	2 ¼" x 2 ¼" (57mm x 57mm)
Top & Bottom Latch Case	4 ½" x 2 ⅛" x 1 ½" (114mm x 54mm x 38mm)
Vertical Rods	½" square tubing, standard rods accommodate 7' (2134mm) door Top rod length is 34 15⁄16" (887mm) Bottom rod length is 31 ¼" (794mm) Extension rods available, 1' (205mm) or 3' (914mm) for doors over 7' One piece top rod available for 8' (2438mm) – 10' (3048mm) door
Projection	Pushbar Neutral – 3 13⁄16" (97 mm) Pushbar Depressed – 3 1⁄16" (78 mm)

See page 53 for How to Order specification

© 2004 Ingersoll-Rand. May be copied for use with specification submittal.

9857-F/9957-F Three-Point Latching Fire Device
Standard Trim

	Exit only	**Dummy Trim** Pull when Dogged (Not recommended for Fire Device)	**Night Latch** Key Retracts Latchbolt	**Night Latch** Key Retracts Latchbolt Optional Pull Required	**Thumbturn** Key Locks & Unlocks (Use with DT Trim)	**Thumbturn** Blank Escutcheon Always Operable (No Cylinder) (Use with DT Trim)
Product Description	9857EO-F 9957EO-F	— —	9857NL-F 9957NL-F	9857NL-OP-F 9957NL-OP-F	9857TL-F 9957TL-F	9857TL-BE-F 9957TL-BE-F
Trim Description	—	990DT	990NL-R/V	110NL-MD 110NL-WD	374T x 990DT	374T-BE x 990DT
Escutcheon Plate Size	—	3" x 14 3/16" x 3/32" *(76x360x2mm)*	3" x 14 3/16" x 3/32" *(76x360x2mm)*	—	2 3/4" x 10 3/4" x 27/32" *(70x273x21mm)*	2 3/4" x 10 3/4" x 27/32" *(70x273x21mm)*
Pull Center to Center	—	5½" *(140mm)*	5½" *(140mm)*	—	—	—
Projection	—	2" *(51mm)*	2" *(51mm)*	—	3¼" *(83mm)*	3¼" *(83mm)*
ANSI Function	01	02	03	03	11	—
Cylinder Type	—	—	Rim	Rim	1¼" Mortise	—
Optional Trim (See pages 32 – 34)	x990EO x992EO x994EO x996EO	x991K-DT x992L-DT x994L-DT x996L-DT x696DT x697DT	x991K-NL x992L-NL x994L-NL x996L-NL x696NL x697NL			
#425 SNB optional-HMD Req. WD w/o SLM Pkg.	6	2	2	6	2	2
#425 SNB Req. w/ 499F	2	2	2	2	2	2

	Lever Key Locks & Unlocks	**Lever – Night Latch** Key Retracts Latchbolt	**Lever – Blank Escutcheon** Always operable (No Cylinder)	**Lever Dummy Trim** Pull when Dogged (Not recommended for Fire Device)
Product Description	9857L-F 9957L-F	9857L-NL-F 9957L-NL-F	9857L-BE-F 9957L-BE-F	— —
Trim Description	996L-R/V	996L-NL-R/V	996L-BE-R/V	996L-DT-RV
Escutcheon Plate Size	2 3/4" x 10 3/4" x 27/32" *(70x273x21mm)*	2 3/4" x 10 3/4" x 27/32" *(70x273x21mm)*	2 3/4" x 10 3/4" x 27/32" *(70x273x21mm)*	2 3/4" x 10 3/4" x 27/32" *(70x273x21mm)*
Pull Center to Center	—	—	—	—
Projection	2 7/8" *(73mm)*	2 7/8" *(73mm)*	2 7/8" *(73mm)*	2 7/8" *(73mm)*
ANSI Function	08	09	—	02
Cylinder Type	Rim	Rim	—	—
Optional Trim (See pages 32 – 34)	x992L x994L	x992L-NL x994L-NL	x992L-BE x994L-BE	x992L-DT x994L-DT
#425 SNB optional-HMD Req. WD w/o SLM Pkg.	2	2	2	2
#425 SNB Req. w/ 499F	2	2	2	2

For optional trims and functions see pages 32-34

338
Top Strike

385A
Bottom Strike

Top Latch

Bottom Latch

9847/9947 concealed vertical rod device for use on single or double metal doors, UL listed for Panic Exit Hardware. Devices are ANSI A156.3 – 2001 Grade 1. The 9847 device has a smooth mechanism case and the 9947 device has a grooved case. The concealed vertical rod device is non-handed except when the following device options are used: SD (Special Dogging), or SS (Signal Switch). See Opposite page for available outside trim and device functions.

The 9847/9947 devices are available in the following finishes: US3, US4, US10, US26, US26D, US28, 313AN, 315AN and US32D for the 9847 device only. See page 52 for component finishes and the inside cover for finish chips.

Specifications

Device Functions	Device ships EO/DT/NL. Field selectable. For TP,K,or L remove NL drive screw from device		
Device Lengths	3'	2'4" to 3' (711mm to 914 mm) Door Size	
	4'	2'10" to 4' (864 mm to 1219 mm) Door Size	
Strikes	Top - 338 – Unfinished, Bottom – 385A - Unfinished Optional Strikes – see page 39		
Dogging Feature	Hex key dogging standard		
Dogging Options	CD	Cylinder Dogging	see page 48
	SD	Special Center Case Dogging	see page 48
	LD	Less Dogging	see page 48
Electric Options	LX	Latchbolt Monitor Switch	see page 42
	RX	Pushpad Monitor Switch	see page 42
	RX2	Double Pushpad Monitor Switch	see page 42
	EL	Electric Latch Retraction	see page 43
	SS	Signal Switch	see page 43
	CX	Chexit Delayed Exit	see page 45
	ALK	Alarm Exit Kit	see page 42
Miscellaneous Options	PN	Pneumatic Latch Retraction	see page 48
	LBR	Less Bottom Rod	see page 49
	GBK	Glass Bead Kit	see page 49
	PL	Pullman Latch	see page 49
Fasteners & Sex Bolts (SNB)	Includes 1 ¾" (19mm) – 2 ¼" (57mm) Wood & Metal Doors Optional SNB available for device, see next page for quantities		
Latch Bolt	Deadlocking Top & Bottom Bolt, ⅝" (16mm) throw		
Device Centerline from Finished Floor	39 ⅝" (1006 mm) Standard, Adjustable from 35 ⅝" (905mm) to 49 ⅝" (1260mm)		
Door Undercut	¼" (7mm) maximum		
Center Case Dimensions	8" x 2 ¾" x 2 ⅜" (203mm x 70mm x 60mm)		
Mechanism Case Dimensions	2 ¼" x 2 ¼" (57mm x 57mm)		
Top & Bottom Latch Case	4 ½" x 2 ⅛" x 1 ½" (114mm x 54mm x 38mm)		
Vertical Rods	Round 2 piece adjustable rods Top rod adjustable from 6'8" (2027mm) to 8'4"(2533mm) Bottom rod adjustable 35 ⅝" (905 mm) to 49 ⅝" (1260 mm) Extension rod kits available for doors over 8'4" (2533mm)		
Projection	Pushbar Neutral – 3 13/16" (97 mm) Pushbar Depressed – 3 1/16" (78 mm)		

See page 53 for How to Order specification

© 2004 Ingersoll-Rand. May be copied for use with specification submittal.

	Exit only	**Dummy Trim** Pull when Dogged	**Night Latch** Key Retracts Latchbolt	**Night Latch** Key Retracts Latchbolt Optional Pull Required	**Thumbturn** Key Locks & Unlocks (Use with DT Trim)	**Thumbturn** Blank Escutcheon Always Operable (No Cylinder) (Use with DT Trim)
Product Description	9847EO 9947EO	9847DT 9947DT	9847NL 9947NL	9847NL-OP 9947NL-OP	9847TL 9947TL	9847TL-BE 9947TL-BE
Trim Description	—	990DT	990NL-R/V	110NL-MD	374T x 990DT	374T-BE x 990DT
Escutcheon Plate Size	—	3" x 14 3/16" x 3/32" *(76x360x2mm)*	3" x 14 3/16" x 3/32" *(76x360x2mm)*	—	2 3/4" x 10 3/4" x 27/32" *(70x273x21mm)*	2 3/4" x 10 3/4" x 27/32" *(70x273x21mm)*
Pull Center to Center	—	5 1/2" *(140mm)*	5 1/2" *(140mm)*	—	—	—
Projection	—	2" *(51mm)*	2" *(51mm)*	—	3 1/4" *(83mm)*	3 1/4" *(83mm)*
ANSI Function	01	02	03	03	11	—
Cylinder Type	—	—	Rim	Rim	1 1/4" Mortise	—
Optional Trim (See pages 32 – 34)	x990EO x992EO x994EO x996EO	x991K-DT x992L-DT x994L-DT x996L-DT x696DT x697DT	x991K-NL x992L-NL x994L-NL x996L-NL x696NL x697NL			
Optional #425 Sex Bolt Quantity for Device	6	2	2	6	2	2

	Lever Key Locks & Unlocks	**Lever – Night Latch** Key Retracts Latchbolt	**Lever – Blank Escutcheon** Always operable (No Cylinder)	**Lever Dummy Trim** Pull when Dogged
Product Description	9847L 9947L	9847L-NL 9947L-NL	9847L-BE 9947L-BE	9847L-DT 9947L-DT
Trim Description	996L-CV	996L-NL-CV	996L-BE-CV	996L-DT-CV
Escutcheon Plate Size	2 3/4" x 10 3/4" x 27/32" *(70x273x21mm)*	2 3/4" x 10 3/4" x 27/32" *(70x273x21mm)*	2 3/4" x 10 3/4" x 27/32" *(70x273x21mm)*	2 3/4" x 10 3/4" x 27/32" *(70x273x21mm)*
Pull Center to Center	—	—	—	—
Projection	2 7/8" *(73mm)*	2 7/8" *(73mm)*	2 7/8" *(73mm)*	2 7/8" *(73mm)*
ANSI Function	08	09	—	02
Cylinder Type	Rim	Rim	—	—
Optional Trim (See pages 32 – 34)	x992L x994L	x992L-NL x994L-NL	x992L-BE x994L-BE	x992L-DT x994L-DT
Optional #425 Sex Bolt Quantity for Device	2	2	2	2

For optional trims and functions see pages 32-34

338
Top Strike

385A
Bottom Strike

Top Latch

Bottom Latch

9847-F/9947-F fire exit concealed vertical rod device for use on pairs of doors up to 8´ x 10´*(2438mm x 3048mm)* , UL listed for Fire Exit Hardware. **See page 41 for detailed information on UL listed fire exit hardware label and door opening size information.** Devices are ANSI A156.3 – 2001 Grade 1. The 9847-F device has a smooth mechanism case and the 9947-F device has a grooved case. The concealed vertical rod device is non-handed except when the following device option is used: SS (Signal Switch) devices. See Opposite page for available outside trim and functions.

The 9847-F/9947-F devices are available in the following finishes: US3, US4, US10, US26, US26D, US28, 313AN, 315AN and US32D for the 9847-F device only. See page 52 for component finishes and the inside cover for finish chips.

Specifications

Device Functions	Device ships EO/DT/NL. Field selectable. For TP,K,or L remove NL drive screw from device
Device Lengths	3' 2'4" to 3' (711mm to 914 mm) Door Size 4' 2'10" to 4' (864 mm to 1219 mm) Door Size
Strikes	Top - 338 – Unfinished, Bottom – 385A - Unfinished Optional Strikes – see page 39
Dogging Feature	No Mechanical Dogging, EL option available
Electric Options	LX Latchbolt Monitor Switch see page 42 RX Pushpad Monitor Switch see page 42 RX2 Double Pushpad Monitor Switch see page 42 EL Electric Latch Retraction see page 43 SS Signal Switch see page 43 CX Chexit Delayed Exit see page 45 ALK Alarm Exit Kit see page 42
Miscellaneous Options	PN Pneumatic Latch Retraction see page 48 **LBR Less Bottom Rod see page 49** GBK Glass Bead Kit see page 49
Fasteners & Sex Bolts (SNB)	Includes 1 ¾" (19mm) – 2 ¼" (57mm) Wood & Metal Doors Optional SNB available for device, see next page for quantities Optional SLM Blocking Pkg for wood doors with SLM blocking SNB required for wood doors, unless SLM Blocking Pkg specified
Latch Bolt	Deadlocking Anti-friction Top & Bottom Bolt, ⅝" (16mm) throw
Device Centerline from Finished Floor	39 ⅝" (1006 mm) Standard, Adjustable from 35 ⅝" (905mm) to 49 ⅝" (1260mm)
Door Undercut	¼" (7mm) maximum
Center Case Dimensions	8" x 2 ¾" x 2 ⅜" (203mm x 70mm x 60mm)
Mechanism Case Dimensions	2 ¼" x 2 ¼" (57mm x 57mm)
Top & Bottom Latch Case	4 ½" x 2 ⅛" x 1 ½" (114mm x 54mm x 38mm)
Vertical Rods	Round 2 piece adjustable rods Top rod adjustable from 6'8" (2027mm) to 8'4"(2533mm) Bottom rod adjustable 35 ⅝" (905 mm) to 49 ⅝" (1260 mm) Extension rod kits available for doors over 8'4" (2533mm)
Projection	Pushbar Neutral – 3 13⁄16" (97 mm) Pushbar Depressed – 3 1⁄16" (78 mm)

See page 53 for How to Order specification

© 2004 Ingersoll-Rand. May be copied for use with specification submittal.

9847-F/9947-F Concealed Vertical Rod Fire Device
Standard Trim

	Exit only	**Dummy Trim** Pull when Dogged (Not recommended for Fire Device) 	**Night Latch** Key Retracts Latchbolt 	**Night Latch** Key Retracts Latchbolt Optional Pull Required 	**Thumbturn** Key Locks & Unlocks (Use with DT Trim) 	**Thumbturn** Blank Escutcheon Always Operable (No Cylinder) (Use with DT Trim)
Product Description	9847EO-F 9947EO-F	— —	9847NL-F 9947NL-F	9847NL-OP-F 9947NL-OP-F	9847TL-F 9947TL-F	9847TL-BE-F 9947TL-BE-F
Trim Description	—	990DT	990NL-R/V	110NL-MD	374T x 990DT	374T-BE x 990DT
Escutcheon Plate Size	—	3" x 14 3/16" x 3/32" *(76x360x2mm)*	3" x 14 3/16" x 3/32" *(76x360x2mm)*	—	2 3/4" x 10 3/4" x 27/32" *(70x273x21mm)*	2 3/4" x 10 3/4" x 27/32" *(70x273x21mm)*
Pull Center to Center	—	5 1/2" *(140mm)*	5 1/2" *(140mm)*	—	—	—
Projection	—	2" *(51mm)*	2" *(51mm)*	—	3 1/4" *(83mm)*	3 1/4" *(83mm)*
ANSI Function	01	02	03	03	11	—
Cylinder Type	—	—	Rim	Rim	1 1/4" Mortise	—
Optional Trim (See pages 32 – 34)	x990EO x992EO x994EO x996EO	x991K-DT x992L-DT x994L-DT x996L-DT x696DT x697DT	x991K-NL x992L-NL x994L-NL x996L-NL x696NL x697NL			
#425 SNB optional-HMD Req. WD w/o SLM Pkg.	6	2	2	6	2	2

	Lever Key Locks & Unlocks 	**Lever – Night Latch** Key Retracts Latchbolt 	**Lever – Blank Escutcheon** Always operable (No Cylinder) 	**Lever Dummy Trim** Pull when Dogged (Not recommended for Fire Device)
Product Description	9847L-F 9947L-F	9847L-NL-F 9947L-NL-F	9847L-BE-F 9947L-BE-F	— —
Trim Description	996L-CV	996L-NL-CV	996L-BE-CV	996L-DT-CV
Escutcheon Plate Size	2 3/4" x 10 3/4" x 27/32" *(70x273x21mm)*	2 3/4" x 10 3/4" x 27/32" *(70x273x21mm)*	2 3/4" x 10 3/4" x 27/32" *(70x273x21mm)*	2 3/4" x 10 3/4" x 27/32" *(70x273x21mm)*
Pull Center to Center	—	—	—	—
Projection	2 7/8" *(73mm)*	2 7/8" *(73mm)*	2 7/8" *(73mm)*	2 7/8" *(73mm)*
ANSI Function	08	09	—	02
Cylinder Type	Rim	Rim	—	—
Optional Trim (See pages 32 – 34)	x992L x994L	x992L-NL x994L-NL	x992L-BE x994L-BE	x992L-DT x994L-DT
#425 SNB optional-HMD Req. WD w/o SLM Pkg.	2	2	2	2

For optional trims and functions see pages 32-34

338
Top Strike

385A
Bottom Strike

Top Latch

Bottom Latch

9848/9948 Concealed vertical rod device for use on single or double metal doors, UL listed for Panic Exit Hardware. Covers stock hollow metal doors with 86 or 161 cutouts. Devices are ANSI A156.3 – 2001 Grade 1. The 9848 device has a smooth mechanism case and the 9948 device has a grooved case. The concealed vertical rod device is non-handed except when the following device options are used: SD (Special Dogging), or SS (Signal Switch). See Opposite page for available outside trim and functions.

The 9848/9948 devices are available in the following finishes: US3, US4, US10, US26, US26D, US28, 313AN, 315AN and US32D for the 9848 device only. See page 52 for component finishes and the inside cover for finish chips.

Specifications

Device Functions	Device ships EO/DT/NL. Field selectable. For TP,K,or L remove NL drive screw from device		
Device Lengths	3'	2'4" to 3' (711mm to 914 mm) Door Size	
	4'	2'10" to 4' (864 mm to 1219 mm) Door Size	
Strikes	Top - 338 – Unfinished, Bottom – 385A - Unfinished Optional Strikes – see page 39		
Dogging Feature	Hex key dogging standard		
Dogging Options	CD	Cylinder Dogging	see page 48
	SD	Special Center Case Dogging	see page 48
	LD	Less Dogging	see page 48
Electric Options	LX	Latchbolt Monitor Switch	see page 42
	RX	Pushpad Monitor Switch	see page 42
	RX2	Double Pushpad Monitor Switch	see page 42
	EL	Electric Latch Retraction	see page 43
	SS	Signal Switch	see page 43
	CX	Chexit Delayed Exit	see page 45
	ALK	Alarm Exit Kit	see page 42
Miscellaneous Options	PN	Pneumatic Latch Retraction	see page 48
	GBK	Glass Bead Kit	see page 49
Fasteners & Sex Bolts (SNB)	Includes 1 ¾" (19mm) – 2 ¼" (57mm) Wood & Metal Doors Optional SNB available for device, see next page for quantities		
Latch Bolt	Deadlocking Top Bolt, ¾" (19mm) throw Deadlocking Bottom Bolt, 1 ½" (38mm) throw		
Device Centerline from Finished Floor	39 5/8" (1006 mm) Standard, Adjustable from 35 ⅝" (905mm) to 49 5/8" (1260mm)		
Door Undercut	¼" (7mm) maximum		
Center Case Dimensions	8" x 2 ¾" x 2 ⅜" (203mm x 70mm x 60mm)		
Mechanism Case Dimensions	2 ¼" x 2 ¼" (57mm x 57mm)		
Top & Bottom Latch Case	4 ½" x 2 1/8" x 1 ½" (114mm x 54mm x 38mm)		
Vertical Rods	Round 2 piece adjustable rods Top rod adjustable from 6'8" (2027mm) to 8'4"(2533mm) Bottom rod adjustable 35 ⅝" (905 mm) to 49 ⅝" (1260 mm) Extension rod kits available for doors over 8'4" (2533mm)		
Projection	Pushbar Neutral – 3 13/16" (97 mm) Pushbar Depressed – 3 1/16" (78 mm)		

See page 53 for How to Order specification

© 2004 Ingersoll-Rand. May be copied for use with specification submittal.

	Exit only	**Dummy Trim** Pull when Dogged	**Night Latch** Key Retracts Latchbolt	**Night Latch** Key Retracts Latchbolt Optional Pull Required	**Thumbturn** Key Locks & Unlocks (Use with DT Trim)	**Thumbturn** Blank Escutcheon Always Operable (No Cylinder) (Use with DT Trim)
Product Description	9848EO 9948EO	9848DT 9948DT	9848NL 9948NL	9848NL-OP 9948NL-OP	9848TL 9948TL	9848TL-BE 9948TL-BE
Trim Description	—	990DT	990NL-R/V	110NL-MD	374T x 990DT	374T-BE x 990DT
Escutcheon Plate Size	—	3" x 14 3/16" x 3/32" *(76x360x2mm)*	3" x 14 3/16" x 3/32" *(76x360x2mm)*	—	2 3/4" x 10 3/4" x 27/32" *(70x273x21mm)*	2 3/4" x 10 3/4" x 27/32" *(70x273x21mm)*
Pull Center to Center	—	5 1/2" *(140mm)*	5 1/2" *(140mm)*	—	—	—
Projection	—	2" *(51mm)*	2" *(51mm)*	—	3 1/4" *(83mm)*	3 1/4" *(83mm)*
ANSI Function	01	02	03	03	11	—
Cylinder Type	—	—	Rim	Rim	1 1/4" Mortise	—
Optional Trim (See pages 32 – 34)	x990EO x992EO x994EO x996EO	x991K-DT x992L-DT x994L-DT x996L-DT x696DT x697DT	x991K-NL x992L-NL x994L-NL x996L-NL x696NL x697NL			
Optional #425 Sex Bolt Quantity for Device	6	2	2	6	2	2

	Lever Key Locks & Unlocks	**Lever – Night Latch** Key Retracts Latchbolt	**Lever – Blank Escutcheon** Always operable (No Cylinder)	**Lever Dummy Trim** Pull when Dogged
Product Description	9848L 9948L	9848L-NL 9948L-NL	9848L-BE 9948L-BE	9848L-DT 9948L-DT
Trim Description	996L-CV	996L-NL-CV	996L-BE-CV	996L-DT-CV
Escutcheon Plate Size	2 3/4" x 10 3/4" x 27/32" *(70x273x21mm)*	2 3/4" x 10 3/4" x 27/32" *(70x273x21mm)*	2 3/4" x 10 3/4" x 27/32" *(70x273x21mm)*	2 3/4" x 10 3/4" x 27/32" *(70x273x21mm)*
Pull Center to Center	—	—	—	—
Projection	2 7/8" *(73mm)*	2 7/8" *(73mm)*	2 7/8" *(73mm)*	2 7/8" *(73mm)*
ANSI Function	08	09	—	02
Cylinder Type	Rim	Rim	—	—
Optional Trim (See pages 32 – 34)	x992L x994L	x992L-NL x994L-NL	x992L-BE x994L-BE	x992L-DT x994L-DT
Optional #425 Sex Bolt Quantity for Device	2	2	2	2

For optional trims and functions see pages 32-34

338
Top Strike

385A
Bottom Strike

Top Latch

Bottom Latch

9848-F/9948-F concealed vertical rod device for use on pairs of doors up to 8´ x 10´*(2438mm x 3048mm),* UL listed for Fire Exit Hardware. **See page 41 for detailed information on UL listed fire exit hardware label and door opening size information.** Devices are ANSI A156.3 – 2001 Grade 1. The 9848-F device has a smooth mechanism case and the 9948-F device has a grooved case. The concealed vertical rod device is non-handed except when the following device option is used: SS (Signal Switch). See Opposite page for available outside trim and functions.

The 9848-F/9948-F devices are available in the following finishes: US3, US4, US10, US26, US26D, US28, 313AN, 315AN and US32D for the 9848-F device only. See page 52 for component finishes and the inside cover for finish chips.

Specifications

Device Functions	Device ships EO/DT/NL. Field selectable. For TP,K,or L remove NL drive screw from device		
Device Lengths	3'	2'4" to 3' (711mm to 914 mm) Door Size	
	4'	2'10" to 4' (864 mm to 1219 mm) Door Size	
Strikes	Top - 338 – Unfinished, Bottom – 385A - Unfinished Optional Strikes – see page 39		
Dogging Feature	No Mechanical Dogging, EL option available		
Electric Options	LX	Latchbolt Monitor Switch	see page 42
	RX	Pushpad Monitor Switch	see page 42
	RX2	Double Pushpad Monitor Switch	see page 42
	EL	Electric Latch Retraction	see page 43
	SS	Signal Switch	see page 43
	CX	Chexit Delayed Exit	see page 45
	ALK	Alarm Exit Kit	see page 42
Miscellaneous Options	PN	Pneumatic Latch Retraction	see page 48
	GBK	Glass Bead Kit	see page 49
Fasteners & Sex Bolts (SNB)	Includes 1 ¾" (19mm) – 2 ¼" (57mm) Wood & Metal Doors Optional SNB available for device, see next page for quantities Optional SLM Blocking Pkg for wood doors with SLM blocking SNB required for wood doors, unless SLM Blocking Pkg specified		
Latch Bolt	Deadlocking Top Bolt, ¾" (19mm) throw Deadlocking Bottom Bolt, 1 ½" (38mm) throw		
Device Centerline from Finished Floor	39 5/8" (1006 mm) Standard, Adjustable from 35 ⅝" (905mm) to 49 5/8" (1260mm)		
Door Undercut	¼" (7mm) maximum		
Center Case Dimensions	8" x 2 ¾" x 2 ⅜" (203mm x 70mm x 60mm)		
Mechanism Case Dimensions	2 ¼" x 2 ¼" (57mm x 57mm)		
Top & Bottom Latch Case	4 ½" x 2 1/8" x 1 ½" (114mm x 54mm x 38mm)		
Vertical Rods	Round 2 piece adjustable rods Top rod adjustable from 6'8" (2027mm) to 8'4"(2533mm) Bottom rod adjustable 35 ⅝" (905 mm) to 49 ⅝" (1260 mm) Extension rod kits available for doors over 8'4" (2533mm)		
Projection	Pushbar Neutral – 3 13/16" (97 mm) Pushbar Depressed – 3 1/16" (78 mm)		

See page 53 for How to Order specification

© 2004 Ingersoll-Rand. May be copied for use with specification submittal.

9848-F/9948-F Concealed Vertical Rod Fire Device
Standard Trim

	Exit only	**Dummy Trim** Pull when Dogged (Not recommended for Fire Device) 	**Night Latch** Key Retracts Latchbolt 	**Night Latch** Key Retracts Latchbolt Optional Pull Required 	**Thumbturn** Key Locks & Unlocks (Use with DT Trim) 	**Thumbturn** Blank Escutcheon Always Operable (No Cylinder) (Use with DT Trim)
Product Description	9848EO-F 9948EO-F	— —	9848NL-F 9948NL-F	9848NL-OP-F 9948NL-OP-F	9848TL-F 9948TL-F	9848TL-BE-F 9948TL-BE-F
Trim Description	—	990DT	990NL-R/V	110NL-MD	374T x 990DT	374T-BE x 990DT
Escutcheon Plate Size	—	3" x 14 3/16" x 3/32" *(76x360x2mm)*	3" x 14 3/16" x 3/32" *(76x360x2mm)*	—	2 3/4" x 10 3/4" x 27/32" *(70x273x21mm)*	2 3/4" x 10 3/4" x 27/32" *(70x273x21mm)*
Pull Center to Center	—	5 1/2" *(140mm)*	5 1/2" *(140mm)*	—	—	—
Projection	—	2" *(51mm)*	2" *(51mm)*	—	3 1/4" *(83mm)*	3 1/4" *(83mm)*
ANSI Function	01	02	03	03	11	—
Cylinder Type	—	—	Rim	Rim	1 1/4" Mortise	—
Optional Trim (See pages 32 – 34)	x990EO x992EO x994EO x996EO	x991K-DT x992L-DT x994L-DT x996L-DT x696DT x697DT	x991K-NL x992L-NL x994L-NL x996L-NL x696NL x697NL			
#425 SNB optional-HMD Req. WD w/o SLM Pkg.	6	2	2	6	2	2

	Lever Key Locks & Unlocks 	**Lever – Night Latch** Key Retracts Latchbolt 	**Lever – Blank Escutcheon** Always operable (No Cylinder) 	**Lever Dummy Trim** Pull when Dogged (Not recommended for Fire Device)
Product Description	9848L-F 9948L-F	9848L-NL-F 9948L-NL-F	9848L-BE-F 9948L-BE-F	— —
Trim Description	996L-CV	996L-NL-CV	996L-BE-CV	996L-DT-CV
Escutcheon Plate Size	2 3/4" x 10 3/4" x 27/32" *(70x273x21mm)*	2 3/4" x 10 3/4" x 27/32" *(70x273x21mm)*	2 3/4" x 10 3/4" x 27/32" *(70x273x21mm)*	2 3/4" x 10 3/4" x 27/32" *(70x273x21mm)*
Pull Center to Center	—	—	—	—
Projection	2 7/8" *(73mm)*	2 7/8" *(73mm)*	2 7/8" *(73mm)*	2 7/8" *(73mm)*
ANSI Function	08	09	—	02
Cylinder Type	Rim	Rim	—	—
Optional Trim (See pages 32 – 34)	x992L x994L	x992L-NL x994L-NL	x992L-BE x994L-BE	x992L-DT x994L-DT
#425 SNB optional-HMD Req. WD w/o SLM Pkg.	2	2	2	2

For optional trims and functions see pages 32-34

338
Top Strike

385A
Bottom Strike

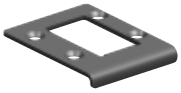

283
Top Strike
For use with
Wood Frames

Top Latch

Bottom Latch

9847WDC/9947WDC concealed vertical rod device for use on single or double wood doors, UL listed for Panic Exit Hardware. Devices are ANSI A156.3 – 2001 Grade 1. The 9847WDC device has a smooth mechanism case and the 9947WDC device has a grooved case. The concealed vertical rod device is non-handed except when the following device options are used: SD (Special Dogging), or SS (Signal Switch). See Opposite page for available outside trim and functions.

The 9847WDC/9947WDC devices are available in the following finishes: US3, US4, US10, US26, US26D, US28, 313AN, 315AN and US32D for the 9847WDC device only. See page 52 for component finishes and the inside cover for finish chips.

Scalp Plate Device is furnished standard with an 8" *(203mm)* long scalp plate for easy access to rods. *Note: Do not use on pair of doors with 9975.*

Specifications

Device Functions	Device ships EO/DT/NL. Field selectable. For TP,K,or L remove NL drive screw from device		
Device Lengths	3'	2'4" to 3' (711mm to 914 mm) Door Size	
	4'	2'10" to 4' (864 mm to 1219 mm) Door Size	
Strikes	Top - 338 – Unfinished, Bottom – 385A - Unfinished Optional Strikes – see page 39		
Dogging Feature	Hex key dogging standard		
Dogging Options	CD	Cylinder Dogging	see page 48
	SD	Special Center Case Dogging	see page 48
	LD	Less Dogging	see page 48
Electric Options	LX	Latchbolt Monitor Switch	see page 42
	RX	Pushpad Monitor Switch	see page 42
	RX2	Double Pushpad Monitor Switch	see page 42
	EL	Electric Latch Retraction	see page 43
	SS	Signal Switch	see page 43
	CX	Chexit Delayed Exit	see page 45
	ALK	Alarm Exit Kit	see page 42
Miscellaneous Options	PN	Pneumatic Latch Retraction	see page 48
	GBK	Glass Bead Kit	see Page 49
	PL	Pullman Latch	see page 49
Fasteners & Sex Bolts (SNB)	Includes 1 ¾" (19mm) – 2 ¼" (57mm) Wood & Metal Doors Optional SNB available for device, see next page for quantities		
Latch Bolt	Deadlocking Top & Bottom Bolt, ⅝" (16mm) throw		
Device Centerline from Finished Floor	39 ⅝" (1006 mm) Standard, Adjustable from 35 ⅝" (905mm) to 49 ⅝" (1260mm)		
Door Undercut	¼" (7mm) maximum		
Center Case Dimensions	8" x 2 ¾" x 2 ⅜" (203mm x 70mm x 60mm)		
Mechanism Case Dimensions	2 ¼" x 2 ¼" (57mm x 57mm)		
Top & Bottom Latch Case	4 ½" x 2 1/8" x 1 ½" (114mm x 54mm x 38mm)		
Vertical Rods	Round 2 piece adjustable rods Top rod adjustable from 6'8" (2027mm) to 8'4"(2533mm) Bottom rod adjustable 35 ⅝" (905 mm) to 49 ⅝" (1260 mm) Extension rod kits available for doors over 8'4" (2533mm)		
Projection	Pushbar Neutral – 3 13/16" (97 mm) Pushbar Depressed – 3 1/16" (78 mm)		

See page 53 for How to Order specification

© 2004 Ingersoll-Rand. May be copied for use with specification submittal.

9847/9947 Wood Door Concealed Vertical Rod Device
Standard Trim

	Exit only	**Dummy Trim** Pull when Dogged	**Night Latch** Key Retracts Latchbolt	**Night Latch** Key Retracts Latchbolt Optional Pull Required	**Thumbturn** Key Locks & Unlocks (Use with DT Trim)	**Thumbturn** Blank Escutcheon Always Operable (No Cylinder) (Use with DT Trim)
Product Description	9847WDC-EO 9947WDC-EO	9847WDC-DT 9947WDC-DT	9847WDC-NL 9947WDC-NL	9847WDC-NL-OP 9947WDC-NL-OP	9847WDC-TL 9947WDC-TL	9847WDC-TL-BE 9947WDC-TL-BE
Trim Description	—	990DT	990NL-R/V	110NL-WD	374T x 990DT	374T-BE x 990DT
Escutcheon Plate Size	—	3" x 14 3/16" x 3/32" *(76x360x2mm)*	3" x 14 3/16" x 3/32" *(76x360x2mm)*	—	2 3/4" x 10 3/4" x 27/32" *(70x273x21mm)*	2 3/4" x 10 3/4" x 27/32" *(70x273x21mm)*
Pull Center to Center	—	5 1/2" *(140mm)*	5 1/2" *(140mm)*	—	—	—
Projection	—	2" *(51mm)*	2" *(51mm)*	—	3 1/4" *(83mm)*	3 1/4" *(83mm)*
ANSI Function	01	02	03	03	11	—
Cylinder Type	—	—	Rim	Rim	1 1/4" Mortise	—
Optional Trim (See pages 32 – 34)	x990EO x992EO x994EO x996EO	x991K-DT x992L-DT x994L-DT x996L-DT x696DT x697DT	x991K-NL x992L-NL x994L-NL x996L-NL x696NL x697NL			
Optional #425 Sex Bolt Quantity for Device	6	2	2	6	2	2

	Lever Key Locks & Unlocks	**Lever – Night Latch** Key Retracts Latchbolt	**Lever – Blank Escutcheon** Always operable (No Cylinder)	**Lever Dummy Trim** Pull when Dogged
Product Description	9847WDC-L 9947WDC-L	9847WDC-L-NL 9947WDC-L-NL	9847WDC-L-BE 9947WDC-L-BE	9847WDC-L-DT 9947WDC-L-DT
Trim Description	996L-CV	996L-NL-CV	996L-BE-CV	996L-DT-CV
Escutcheon Plate Size	2 3/4" x 10 3/4" x 27/32" *(70x273x21mm)*	2 3/4" x 10 3/4" x 27/32" *(70x273x21mm)*	2 3/4" x 10 3/4" x 27/32" *(70x273x21mm)*	2 3/4" x 10 3/4" x 27/32" *(70x273x21mm)*
Pull Center to Center	—	—	—	—
Projection	2 7/8" *(73mm)*	2 7/8" *(73mm)*	2 7/8" *(73mm)*	2 7/8" *(73mm)*
ANSI Function	08	09	—	02
Cylinder Type	Rim	Rim	—	—
Optional Trim (See pages 32 – 34)	x992L x994L	x992L-NL x994L-NL	x992L-BE x994L-BE	x992L-DT x994L-DT
Optional #425 Sex Bolt Quantity for Device	2	2	2	2

For optional trims and functions see pages 32-34

9847WDC-F/9947WDC-F Wood Door Concealed Vertical Rod Fire Device

338
Top Strike

385A
Bottom Strike

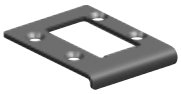

283
Top Strike
For use with
Wood Frames

Top Latch

Bottom Latch

9847WDC-F/9947WDC-F fire exit concealed vertical rod device for use on pairs of doors up to 8' x 9' 3" *(2438mm x 2819mm)* double wood doors, UL listed for Fire Exit Hardware. **See page 41 for detailed information on UL listed fire exit hardware label and door opening size information.** Devices are ANSI A156.3 – 2001 Grade 1. The 9847WDC-F device has a smooth mechanism case and the 9947WDC-F device has a grooved case. The concealed vertical rod device is non-handed except when the following device options are used: SS (Signal Switch). See Opposite page for available outside trim and functions.

The 9847WDC-F/9947WDC-F devices are available in the following finishes: US3, US4, US10, US26, US26D, US28, 313AN, 315AN and US32D for the 9847WDC-F device only. See page 52 for component finishes and the inside cover for finish chips.

Scalp Plate Device is furnished standard with an 8" *(203mm)* long scalp plate for easy access to rods. *Note: Do not use on pair of doors with 9975.*

Specifications

Device Functions	Device ships EO/DT/NL. Field selectable. For TP,K,or L remove NL drive screw from device
Device Lengths	3' 2'4" to 3' (711mm to 914 mm) Door Size 4' 2'10" to 4' (864 mm to 1219 mm) Door Size
Strikes	Top - 338 – Unfinished, Bottom – 385A - Unfinished Optional Strikes – see page 39
Dogging Feature	No Mechanical Dogging, EL option available
Electric Options	LX Latchbolt Monitor Switch see page 42 RX Pushpad Monitor Switch see page 42 RX2 Double Pushpad Monitor Switch see page 42 EL Electric Latch Retraction see page 43 SS Signal Switch see page 43 CX Chexit Delayed Exit see page 45 ALK Alarm Exit Kit see page 42
Miscellaneous Options	PN Pneumatic Latch Retraction see page 48 **LBR Less Bottom Rod see page 49** GBK Glass Bead Kit see page 49
Fasteners & Sex Bolts (SNB)	Includes 1 ¾" (19mm) – 2 ¼" (57mm) Wood & Metal Doors Optional SNB available for device, see next page for quantities Optional SLM Blocking Pkg for wood doors with SLM blocking SNB required for wood doors, unless SLM Blocking Pkg specified
Latch Bolt	Deadlocking Anti-friction Top & Bottom Bolt, ⅝" (16mm) throw
Device Centerline from Finished Floor	39 ⅝" (1006 mm) Standard, Adjustable from 35 ⅝" (905mm) to 49 ⅝" (1260mm)
Door Undercut	¼" (7mm) maximum
Center Case Dimensions	8" x 2 ¾" x 2 ⅜" (203mm x 70mm x 60mm)
Mechanism Case Dimensions	2 ¼" x 2 ¼" (57mm x 57mm)
Top & Bottom Latch Case	4 ½" x 2 1/8" x 1 ½" (114mm x 54mm x 38mm)
Vertical Rods	Round 2 piece adjustable rods Top rod adjustable from 6'8" (2027mm) to 8'4"(2533mm) Bottom rod adjustable 35 ⅝" (905 mm) to 49 ⅝" (1260 mm) Extension rod kits available for doors over 8'4" (2533mm)
Projection	Pushbar Neutral – 3 13/16" (97 mm) Pushbar Depressed – 3 1/16" (78 mm)

See page 53 for How to Order specification

© 2004 Ingersoll-Rand. May be copied for use with specification submittal.

9847WDC-F/9947WDC-F Wood Door Concealed Vertical Rod Fire Device Standard Trim

	Exit only	**Dummy Trim** Pull when Dogged (Not recommended for Fire Device) 	**Night Latch** Key Retracts Latchbolt 	**Night Latch** Key Retracts Latchbolt Optional Pull Required 	**Thumbturn** Key Locks & Unlocks (Use with DT Trim) 	**Thumbturn** Blank Escutcheon Always Operable (No Cylinder) (Use with DT Trim)
Product Description	9847WDC-EO-F 9947WDC-EO-F	— —	9847WDC-NL-F 9947WDC-NL-F	9847WDC-NL-OP-F 9947WDC-NL-OP-F	9847WDC-TL-F 9947WDC-TL-F	9847WDC-TL-BE-F 9947WDC-TL-BE-F
Trim Description	—	990DT	990NL-R/V	110NL-WD	374T x 990DT	374T-BE x 990DT
Escutcheon Plate Size	—	3" x 14 3/16" x 3/32" *(76x360x2mm)*	3" x 14 3/16" x 3/32" *(76x360x2mm)*	—	2¾" x 10¾" x 27/32" *(70x273x21mm)*	2¾" x 10¾" x 27/32" *(70x273x21mm)*
Pull Center to Center	—	5½" *(140mm)*	5½" *(140mm)*	—	—	—
Projection	—	2" *(51mm)*	2" *(51mm)*	—	3¼" *(83mm)*	3¼" *(83mm)*
ANSI Function	01	02	03	03	11	—
Cylinder Type	—	—	Rim	Rim	1¼" Mortise	—
Optional Trim (See pages 32 – 34)	x990EO x992EO x994EO x996EO	x991K-DT x992L-DT x994L-DT x996L-DT x696DT x697DT	x991K-NL x992L-NL x994L-NL x996L-NL x696NL x697NL			
#425 SNB optional-HMD Req. WD w/o SLM Pkg.	6	2	2	6	2	2

	Lever Key Locks & Unlocks 	**Lever – Night Latch** Key Retracts Latchbolt 	**Lever – Blank Escutcheon** Always operable (No Cylinder) 	**Lever Dummy Trim** Pull when Dogged (Not recommended for Fire Device)
Product Description	9847WDC-L-F 9947WDC-L-F	9847WDC-L-NL-F 9947WDC-L-NL-F	9847WDC-L-BE-F 9947WDC-L-BE-F	— —
Trim Description	996L-CV	996L-NL-CV	996L-BE-CV	996L-DT-CV
Escutcheon Plate Size	2¾" x 10¾" x 27/32" *(70x273x21mm)*	2¾" x 10¾" x 27/32" *(70x273x21mm)*	2¾" x 10¾" x 27/32" *(70x273x21mm)*	2¾" x 10¾" x 27/32" *(70x273x21mm)*
Pull Center to Center	—	—	—	—
Projection	2⅞" *(73mm)*	2⅞" *(73mm)*	2⅞" *(73mm)*	2⅞" *(73mm)*
ANSI Function	08	09	—	02
Cylinder Type	Rim	Rim	—	—
Optional Trim (See pages 32 – 34)	x992L x994L	x992L-NL x994L-NL	x992L-BE x994L-BE	x992L-DT x994L-DT
#425 SNB optional-HMD Req. WD w/o SLM Pkg.	2	2	2	2

For optional trims and functions see pages 32-34

Knob and Thumbpiece Trim

	Knob Key Locks & Unlocks	**Knob – Night Latch** Key Retracts Latchbolt	**Knob – Blank Escutcheon** Alwaya Operable (No Cylinder)	**Knob – Dummy Trim** Pull when Dogged	**Thumbpiece** Key Locks & Unlocks	**Thumbpiece Blank Escutcheon** Always Operable (No Cylinder)
Trim Description	991K	991K-NL	991K-BE	991K-DT	990TP	990TP-BE
Escutcheon Plate Size	2¾" x 10¾" x 27/32" *(70x273x21mm)*	2¾" x 10¾" x 27/32" *(70x273x21mm)*	2¾" x 10¾" x 27/32" *(70x273x21mm)*	2¾" x 10¾" x 27/32" *(70x273x21mm)*	2¾" x 10¾" x 27/32" *(70x273x21mm)*	2¾" x 10¾" x 27/32" *(70x273x21mm)*
Pull Center to Center	—	—	—	—	5½" *(140mm)*	5½" *(140mm)*
Projection	3¼" *(83mm)*	3¼" *(83mm)*	3¼" *(83mm)*	3¼" *(83mm)*	2" *(51mm)*	2" *(51mm)*
ANSI Function	08	09	—	02	05	05
Cylinder Type						
Rim or Vertical Rod Device	Rim	Rim	—	—	Rim	—
Mortise Lock Device	1¼" Mortise	1¼" Mortise			1¼" Mortise	—
#425 SNB optional-HMD Req. WD w/o SLM Pkg.	2	2	2	2	2	2
#825 SNB Req. WD w/o SLM Pkg. F Rim device ONLY	2	2	2	2	2	2
#425 SNB Req. w/ 499F	2	2	2	2	2	2

Lever Design Options

#01

#02

#03

#05

#06
Standard

#07

#12
Handed

#16

#17

#18

© 2004 Ingersoll-Rand. May be copied for use with specification submittal.

996L Trim

The new 996L Breakaway™ trim has become the standard lever trim offering on the 98L/99L series devices. The 996L trim blends two successful Von Duprin designs; the look of the traditional 992L lever trim and the security and durability of the Von Duprin Breakaway™ design. The Breakaway™ design is especially effective in areas where vandalism to door hardware is a problem. The design intent is to discourage costly repairs from becoming necessary. The Breakaway™ feature is not available on the NL (night-latch) or DT (dummy trim) versions.

Optional Lever Trims – 992

	Lever Key Locks and Unlocks 	**Lever – Night Latch** Key Retracts Latchbolt 	**Lever – Blank Escutcheon** Always Operable (No Cylinder) 	**Lever – Dummy Trim** Pull when Dogged (Not recommended for Fire Device)
Trim Description	992L	992L-NL	992L-BE	992L-DT
Escutcheon Plate Size	2¾" x 10¾" x 27/32" *(70x273x21mm)*	2¾" x 10¾" x 27/32" *(70x273x21mm)*	2¾" x 10¾" x 27/32" *(70x273x21mm)*	2¾" x 10¾" x 27/32" *(70x273x21mm)*
Pull Center to Center	—	—	—	—
Projection	2⅞" *(73mm)*	2⅞" *(73mm)*	2⅞" *(73mm)*	2⅞" *(73mm)*
ANSI Function	08	09	—	02
Cylinder Type				
Rim or Vertical Rod Device	Rim	Rim	—	—
Mortise Lock Device	1¼" Mortise	1¼" Mortise	—	—

The 992L trim series provides the traditional Von Duprin escutcheon design. Special versions available for doors of over 2 ¼" *(57mm)* thicknesses. Additionally available in an RX and E-locking/unlocking version.

Optional Lever Trims – 994

	Lever Key Locks and Unlocks 	**Lever – Night Latch** Key Retracts Latchbolt 	**Lever – Blank Escutcheon** Always Operable (No Cylinder) 	**Lever – Dummy Trim** Pull when Dogged (Not recommended for Fire Device)
Trim Description	994L	994L-NL	994L-BE	994L-DT
Escutcheon Plate Size	2¾" x 9¼" x 27/32" *(70x235x21mm)*	2¾" x 9¼" x 27/32" *(70x235x21mm)*	2¾" x 9¼" x 27/32" *(70x235x21mm)*	2¾" x 9¼" x 27/32" *(70x235x21mm)*
Pull Center to Center	—	—	—	—
Projection	2⅞" *(73mm)*	2⅞" *(73mm)*	2⅞" *(73mm)*	2⅞" *(73mm)*
ANSI Function	08	09	—	02
Cylinder Type				
Rim or Vertical Rod Device	Rim	Rim	—	—
Mortise Lock Device	1¼" Mortise	1¼" Mortise	—	—

Optional Lever Trims – 696/697

	Dummy Trim Pull when Dogged (Not recommended for Fire Device)	**Dummy Trim** Pull when Dogged (Not recommended for Fire Device)	**Night Latch** Key Retracts Latchbolt	**Night Latch** Key Retracts Latchbolt
Trim Description	696DT	697DT	696NL	697NL
Escutcheon Plate Size	1⅝" x 13½" x 3⁄16" (*41x343x5mm*)	1⅝" x 13½" x 3⁄16" (*41x343x5mm*)	1⅝" x 13½" x 3⁄16" (*41x343x5mm*)	1⅝" x 13½" x 3⁄16" (*41x343x5mm*)
Pull Center to Center	5½" (*140mm*)	5½" (*140mm*)	5½" (*140mm*)	5½" (*140mm*)
Projection	2⅙" (*52mm*)	3" (*76mm*)	2⅙" (*52mm*)	3" (*76mm*)
ANSI Function	02	02	03	03
Cylinder Type				
Rim or Vertical Rod Device	—	—	Rim	Rim
Mortise Lock Device	—	—	1¼" Mortise	1¼" Mortise
#425 SNB optional-HMD Req. WD w/o SLM Pkg.	2	2	2	2
#825 SNB Req. WD w/o SLM Pkg.	2	2	2	2
#425 SNB Req. w/ 499F	2	2	2	2

Optional Lever Trims – 696/697

	Thumbpiece Key Locks & Unlocks	**Thumbpiece** Key Locks & Unlocks	**Thumbpiece - Blank Escutcheon** Always Operable (No Cylinder)	**Thumbpiece - Blank Escutcheon** Always Operable (No Cylinder)
Trim Description	696TP	697TP	696TP-BE	697TP-BE
Escutcheon Plate Size	1⅝" x 13½" x 3⁄16" (*41x343x5mm*)	1⅝" x 13½" x 3⁄16" (*41x343x5mm*)	1⅝" x 13½" x 3⁄16" (*41x343x5mm*)	1⅝" x 13½" x 3⁄16" (*41x343x5mm*)
Pull Center to Center	5½" (*140mm*)	5½" (*140mm*)	5½" (*140mm*)	5½" (*140mm*)
Projection	2⅙" (*52mm*)	3" (*76mm*)	2⅙" (*52mm*)	3" (*76mm*)
ANSI Function	05	05	05	05
Cylinder Type				
Rim or Vertical Rod Device	Rim	Rim	—	—
Mortise Lock Device	1¼" Mortise	1¼" Mortise	—	—
#425 SNB optional-HMD Req. WD w/o SLM Pkg.	2	2	2	2
#825 SNB Req. WD w/o SLM Pkg.	2	2	2	2
#425 SNB Req. w/ 499F	2	2	2	2

© 2004 Ingersoll-Rand. May be copied for use with specification submittal.

Operation Options

Lever and Knob Operations

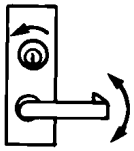

Standard operation, key locks and unlocks lever or knob. e.g., 996L (Classroom)

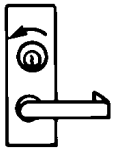

Night latch, key retracts latch bolt. Lever or knob is rigid. Use NL suffix, e.g. 996LNL. (Storeroom)

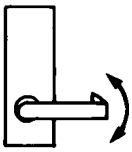

Blank escutcheon, lever or knob always active. Use BE suffix, e.g., 996L-BE. (Passage)

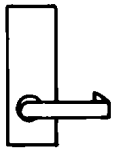

Dummy trim, lever or knob rigid for pull operation. Use DT suffix, e.g., 996L-DT.

374T/376T Series Thumbturn Control
(Shown with 990DT Trim)

Standard operation, key locks and unlocks thumbturn. Optional operation, key unlocks thumbturn, re-locks when key is removed. This operation is created by changing the cylinder plate included with control. Use 1¼" mortise cylinder with a straight cam. Schlage cam reference B502-191.

HL6 Exit Device Trim Option

Von Duprin and Glynn-Johnson have collaborated on an exit device trim that answers the problem of accessibility and performance.Using the Von Duprin 98/9975 mortise lock exit device along with the Glynn-Johnson HL6 Push/Pull latch, Ingersoll-Rand has created an exit device with mortise lock durability that utilizes a fully ADA compliant Pull paddle trim. The 98/9975HL device is available in all standard architectural finished and can be found in the Von Duprin device price list for easy ordering.

Vandal Resistant Trim

VR910 & VR914 Series

Features:

- Stainless Steel construction, 11 gage (0.120" thick)
- Thru-bolts and rugged mounting screws for maximum fastening strength.
- 10-24 screws supplied with VR910 & VR914 models.
- Built-in lock protector prevents vandalism to mortise latchbolt (available on certain models).
- Extra-tough stainless steel cylinder collar prevents pipe wrench or similar tool from damaging cylinder. Tapered design prevents side impacts from transferring directly to cylinder. Collar spins freely.
- Furnished with mounting screws for door thicknesses of 1¾" to 2¼"
- Finish: US32D
- VR910 grip coated in black plastisol for softer touch and resilience to temperature extremes. Grip designed for comfortable operation.
- VR914 grip in all stainless steel.
- Meets ANSI/BHMA 156.13, Trim Security Test and California State Accessibility Standards Title 24.
- 1½" (38mm) clearence from grip to door
- 1⅞" (48mm) total projection from door
- Consult IVES catalog for specification/ordering information.

Model	For Use With	Size
VR910DT & VR914DT	98/99 Rim or Vert. Rod Device	5¼" (133mm) w x 11" (279mm) h
VR910NL & VR914NL	98/99 Rim or Vert. Rod Device	5¼" (133mm) w x 11" (279mm) h
VR910M-DT & VR914M-DT	9875/9975 Mortise Device	7¼" (184mm) w x 11" (279mm) h
VR910M-NL & VR914M-NL	9875/9975 Mortise Device	7¼" (184mm) w x 11" (279mm) h

The Von Duprin Computer Managed CM993 Exit Trim is a stand-alone, battery-powered exit trim for use on doors where an exit device is required for egress. The CM993 is designed to be used with Von Duprin 98/99™ Rim and Vertical Rod exit devices for unmatched access control and ease of use. It can be programmed with LockLink™ or LockLink™ Express access control management software. The same software can also manage the Schlage CM Locks and the Locknetics Universal Controllers, which provide intelligent access control for electrified or battery-powered products such as magnets, strikes and cabinet locks.

Multiple users, Multiple access points. Multiple credential. One way to manage them.

Provides Unmatched Access Control

- Manages up to 1,000 users and provides audit trail for last 1,000 events
- SmarTime feature allows for time functionality:
  - 16 time zones
  - 16 time schedules
  - 32 holidays
  - first person in
  - time expiration
  - time activation
- Full-swipe mag stripe card reader for maximum readability and reliability
- Optional audit trail of mechanical key override
- Optional auto card updating feature disables a lost or stolen card when the reissued card is presented at the lock
- LED status indicators

Easy To Retrofit…Easy To Operate And Architecturally Designed For New Construction

- Directly retrofits existing trim
- Fits doors from 1⅜" to 2¼" thick
- Comes with Schlage Everest 1¼" cylinder, but can adapt to other existing key systems
- LockLink software that programs the locks is Windows®-based and menu-driven. It can be operated with minimal training.

Conversion to New Card System Not Necessary

- Our exit device trims most likely work with your existing mag card and HID prox cards

Von Duprin Programmable PRO993 Exit Trim For Manual Programming

- Manually program up to 120 keycodes right at the trim
- Similar mechanical features as CM993
- Complements Schlage PRO and Locknetics PRO series products

For use with Von Duprin 98/99™ Series Exit Devices including Rim, Surface Vertical, Concealed Vertical and Three-Point latching models. (Not for use with mortise devices).

NOT FOR USE WITH CHEXIT DEVICES

© 2004 Ingersoll-Rand. May be copied for use with specification submittal.

CM993 – MGK – 06 – LH – KD – 695 – EXT

- **Select Model**
- **Select Access Credential Option**
- **Select Lever**
- **Select Handing**
- **Select Key Cylinder Option**
- **Select Finish**
- **Select Trim Options**

1. Select Model

CM993 Computer managed exit trim

PRO993 Manually programmed exit trim

2. Select Access Credential Option (CMs only)

KPI
Keypad iButton Reader

IBO
iButton Reader

MGK
Mag Card Reader Keypad iButton Reader

MGI
Mag Card Reader iButton Reader

PXK
HID prox Reader Keypad iButton Reader

PXI
HID prox Reader iButton Reader

3. Select Lever

#03

#06
Standard

#17

4. Select Handing

RH Right Hand
LH Left Hand
Note: Handing is field-reversible

5. Select Key Cylinder Option

KD Schlage Everest Cylinder
LC Less Cylinder
Note: Master keyed cylinders order separately

6. Select Finish:

605 Bright Brass
612 Satin Bronze
613 Oil-Rubbed Bronze
625 Bright Chrome
626 Satin Chrome (Standard)
695 Duranodic Dark Bronze

7. Select Trim Options

ATK Audit trail of mechanical key override, includes ATR (Requires computer programming).

T3 ABA Track 3 Mag Card Reader (ABA Track 2 is standard for MGI and MGK Series only).

EXT is now standard. Specify if for interior use.
Mag Card Reader for exterior use (for MGI and MGK Series only).

Select Credentials

IBA	iButton (adhesive backed)
IBF	iButton on Fob
MAG1	Magnetic Stripe Card – Blank
MAG2	Magnetic Stripe Card – Pre-encoded
PRX1	Prox Card – Standard .070" thick
PRX2	Prox Card – Adhesive backed for photo application, .070" thick
PRX3	Prox Card – ISO – credit card size and thickness, .031" thick
PRX4	Prox Card – Dual Technologies, magnetic stripe and Prox, .031" thick
PF1	Prox Fob

Door Thickness State door thickness. Available from 1⅜" to 2¾" in ⅛" increments

DEVICE TYPE	STANDARD SINGLE DOOR			STANDARD DOUBLE DOOR			OPTIONAL SINGLE DOOR			OPTIONAL DOUBLE DOOR		
	STRIKE	TRIM/STILE		STRIKE W/MULLION*	TRIM/STILE		STRIKE	TRIM/STILE		STRIKE W/MULLION*	TRIM/STILE	
		990/992 994/996	696/697		990/992 994/996	696/697		990/992 994/996	696/697		990/992 994/996	696/697
98/99	299	4-1/2" (114mm)	4-3/8" (111mm)	299 x 4954	4-7/8" (124mm)	4-3/4" (121mm)	1439 or 1410	3-13/16" (97mm)	3-13/16" (97mm)	299 x 5654	4-7/16" (113mm)	4-1/4" (108mm)
										1408 x 5754	3-13/16" (97mm)	3-13/16" (97mm)
							1606	4-1/16" (103mm)	3-15/16" (100mm)	1606 x 1654	4-7/16" (113mm)	4-1/4" (108mm)
98-F/99-F	299F	4-1/2" (114mm)	4-3/8" (111mm)	499F x 9954	4-7/8" (124mm)	4-3/4" (121mm)	—	—	—	499F x 9854 KR9954	—	—
9875 9975	575	4-3/4" (121mm)	4-3/4" (121mm)	575-2	—	—	—	—	—	576A-576B	4-3/4" (121mm)	4-3/4" (121mm)
9875-F 9975-F	575	4-3/4" (121mm)	4-3/4" (121mm)	575-2	—	—	—	—	—	576A-576B	4-3/4" (121mm)	4-3/4" (121mm)
9857 9957	299 (Top) 299 (Middle) 304L/284-L (Bottom)	4-1/2" (114mm)	4-3/8" (111mm)	299 x 4954	4-7/8" (124mm)	4-3/4" (121mm)	1439 or 1410	3-13/16" (97mm)	3-13/16" (97mm)	299 x 4954	4-7/16" (113mm)	4-1/4" (108mm)
										1408 x 5754	3-13/16" (97mm)	3-13/16" (97mm)
							1606	4-1/16" (103mm)	3-15/16" (100mm)	1606 x 1654	4-7/16" (113mm)	4-1/4" (108mm)
9857-F 9957-F	299F (Top) 299F (Middle) 304L (Bottom)	4-1/2" (114mm)	4-3/8" (111mm)	299F 499F x 9954 304L	4-7/8" (124mm)	4-3/4" (121mm)	—	—	—	—	—	—

	STRIKE	APPLICATION	TRIM/STILE		OPTIONAL STRIKE	APPLICATION	TRIM/STILE	
			990/992 994/996	696/697			990/992 994/996	696/697
9827 9927 LATCH RETRACTION	299 (Top) 304L/248L-4 (Bottom)	Single Door	3-11/16" (94mm)	3-5/8" (92mm)	260U (Top) 385A (Bottom)	Single Door	3-11/16" (94mm)	3-5/8" (92mm)
PL9827/PL9927 PULLMAN LATCH	299 (Top) 304L/248L-4 (Bottom)	Two Vertical Rod Devices	3-11/16" (94mm)	3-5/8" (92mm)		Two Vertical Rod Devices	3-11/16" (94mm)	3-5/8" (92mm)
9827-F 9927-F	299 (Top) 304L (Bottom)				260U (Stainless) 385A (Bottom)			
9847 9947 9848 9948	338 (Top) 385A (Bottom)	Vertical Rod with Mortise Lock Device	4-3/4" (121mm)	4-3/4" (121mm)	304L (Bottom)	Vertical Rod with Mortise Lock Device	4-3/4" (121mm)	4-3/4" (121mm)
9847-F 9947-F 9848-F 9948-F	338 (Top) 385A (Bottom)	Two Vertical Rods	4-1/4" (108mm)	4-1/8" (105mm)	304L (Bottom)	Two Vertical Rods	4-1/4" (108mm)	4-1/8" (105mm)
		Vertical Rod with Mortise Lock Device	4-3/4" (121mm)	4-3/4" (121mm)		Vertical Rod with Mortise Lock Device	4-3/4" (121mm)	4-3/4" (121mm)
9847WDC 9947WDC	338 (Top) 385A (Bottom)	Single Door	4-1/4" (108mm)	4-1/4" (108mm)	304L	Single Door	4-1/4" (108mm)	4-1/4" (108mm)
		Two Vertical Rod Devices	4-1/4" (108mm)	4-1/4" (108mm)		Two Vertical Rod Devices	4-1/4" (108mm)	4-1/4" (108mm)
		Vertical Rod with Mortise Lock Device	4-3/4" (121mm)	4-3/4" (121mm)		Vertical Rod with Mortise Lock Device	4-3/4" (121mm)	4-3/4" (121mm)
9847WDC-F 9947WDC-F	338 (Top) 385A (Bottom)	Two Vertical Rod Devices	4-1/4" (108mm)	4-1/4" (108mm)	304L	Two Vertical Rod Devices	4-1/4" (108mm)	4-1/4" (108mm)

**Mullion information–refer to the General and Auxiliary catalog.*

© 2004 Ingersoll-Rand. May be copied for use with specification submittal.

Strikes for rim devices

264

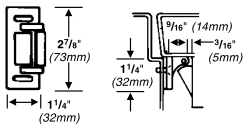

Projection 9/16" (14mm)

299

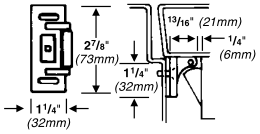

Projection 13/16" (21mm)

299F

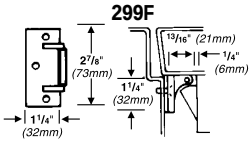

Projection 13/16" (21mm)

499F

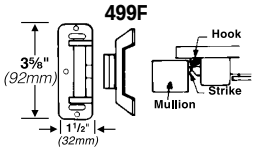

Projection 15/16" (24mm)

1408

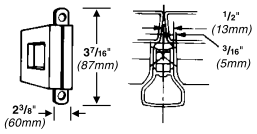

One per pair of doors

1439–Blade Stop

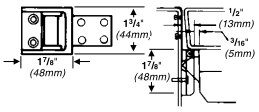

Projection 1/2" (13mm)

1410–Integral Stop

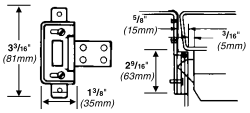

Projection 1/2" (13mm)

1606

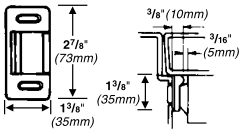

Projection 3/8" (10mm)
Panic Devices Only

1609

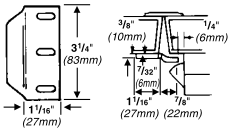

- Requires Coordinator
- For Fire Rated Application, consult factory

Strikes for vertical rod devices

248L-4

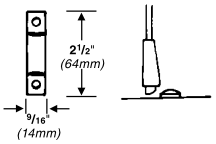

Projection 3/8" (10mm)

260U–Flush Transom Only

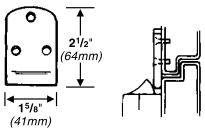

Projection 3/8" (10mm)
For Fire Rated Application, consult factory

299

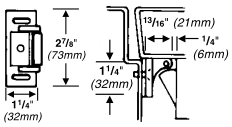

Projection 13/16" (21mm)

299F

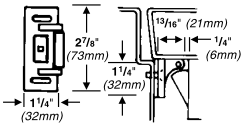

Projection 13/16" (21mm)

304L

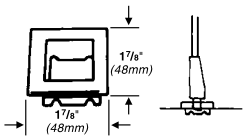

Mortise 13/16" (21mm)

338

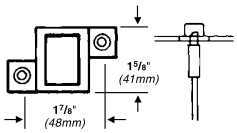

Mortise 5/8" (16mm)

385A

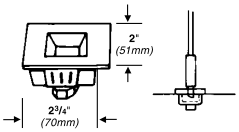

Mortise 2-1/2" (64mm)

283

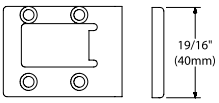

For use with WDC devices
when used with wood frames

Strikes for mortise lock devices

575

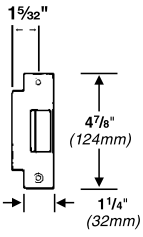

For use on 1 3/4" *(44mm)* or 2 1/4" *(57mm)* Single door and 2 1/4" *(57mm)* double door with coordinator.

575-2

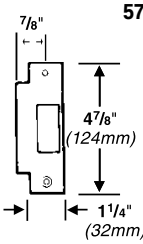

For use on 1 3/4" *(44mm)* thick double door with coordinator and astragal

576A

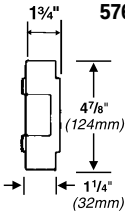

Open back strike for 1 3/4" *(44mm)* thick double doors without coordinator.

576B

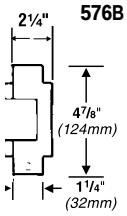

Open back strike for 2 1/4" *(57mm)* thick double doors without coordinator.

- Not for use with astragals
- Not for use on wood doors
- Acceptable for 90 minute pair of hollow metal doors

ANSI Grade, Type & Function

Function	Grade 1, Type 1	Grade 1, Type 2	Grade 1, Type 3	Grade 1, Type 7	Grade 1, Type 8	Grade 1, Type 9
01	98EO, 98EO-F 99EO, 99EO-F	9827EO, 9827EO-F 9927EO, 9927EO-F	9875EO, 9875EO-F 9975EO, 9975EO-F	9847WDC-EO & EO-F 9947WDC-EO & EO-F	9847EO, 9848EO-F 9947EO, 9947EO-F	9857EO, 9857EO-F 9957EO, 9957EO-F
02	98DT 99DT	9827DT 9927DT	9875DT 9975DT	9847WDC-DT* 9947WDC-DT	9848DT 9948DT	9857DT 9957DT
03	98NL, 98NL-F 99NL,99NL-F	9827NL, 9827NL-F 9927NL, 9927NL-F	9875NL, 9875NL-F 9975NL, 9975NL-F	9847WDC-NL & NL-F 9947WDC-NL & NL-F	9847NL, 9847NL-F 9947NL, 9947NL-F	9857NL, 9857NL-F 9957NL, 9957NL-F
05	98TP, 98TP-F 99TP, 99TP-F	9827TP, 9827TP-F 9927TP, 9927TP-F	9875TP, 9875TP-F 9975TP, 9975TP-F	9847WDC-TP & TP-F 9947WDC-TP & TP-F	9847TP, 9847TP-F 9947TP, 9947TP-F	9857TP, 9857TP-F 9957TP, 9957TP-F
07	98TP-2, 98TP-F-2 99TP-2, 99TP-F-2	— —	— —	— —	— —	— —
08*	98K, 98K-F 99K, 99K-F	9827K, 9827K-F 9927K, 9927K-F	9875K, 9875K-F 9975K, 9975K-F	9847WDC-K & WDC-K-F 9947WDC-K & WDC-K-F	9847K, 9847K-F 9947K, 9947K-F	9857K, 9857K-F 9957K, 9957K-F
08	98L, 98L-F 99L, 99L-F	9827L, 9827L-F 9927L, 9927L-F	9875L, 9875L-F 9975L, 9975L-F	9847WDC-L & WDC-L-F 9947WDC-L & WDC-L-F	9847L, 9847L-F 9947L, 9947L-F	9857L, 9857L-F 9957L, 9957L-F
09*	98K-NL, 98K-NL-F 99K-NL, 99K-NL-F	9827K-NL, 9827K-NL-F 9927K-NL, 9927K-NL-F	9875K-NL, 9875K-NL-F 9975K-NL, 9975K-NL-F	9847WDC-K-NL & WDC-K-NL-F 9947WDC-K-NL & WDC-K-NL-F	9847K-NL, 9847K-NL-F 9947K-NL, 9947K-NL-F	9857K-NL, 9857K-NL-F 9957K-NL, 9957K-NL-F
09	98L-NL, 98L-NL-F 99L-NL, 99L-NL-F	9827L-NL, 9827L-NL-F 9927L-NL, 9927L-NL-F	9875L-NL, 9875L-NL-F 9975L-NL, 9975L-NL-F	9847WDC-L-NL & WDC-L-NL-F 9947WDC-L-NL & WDC-L-NL-F	9847L-NL, 9847L-NL-F 9927L-NL, 9947L-NL-F	9857L-NL, 9857L-NL-F 9957L-NL, 9957L-NL-F
10*	98K-2, 98K-F-2 99K-2, 99K-F-2	— —	— —	— —	— —	— —
10	98K-2, 98K-F-2 99K-2, 99K-F-2	— —	— —	— —	— —	— —
11-12	— —	9827TL, 9827TL-F 9927TL, 9927TL-F	— —	9847WDC-TL & TL-F 9947WDC-TL & TL-F	9847TL, 9847TL-F 9947TL, 9947TL-F	— —

***Device is Grade 1, 991K trim is Grade 2.**

Dimensions

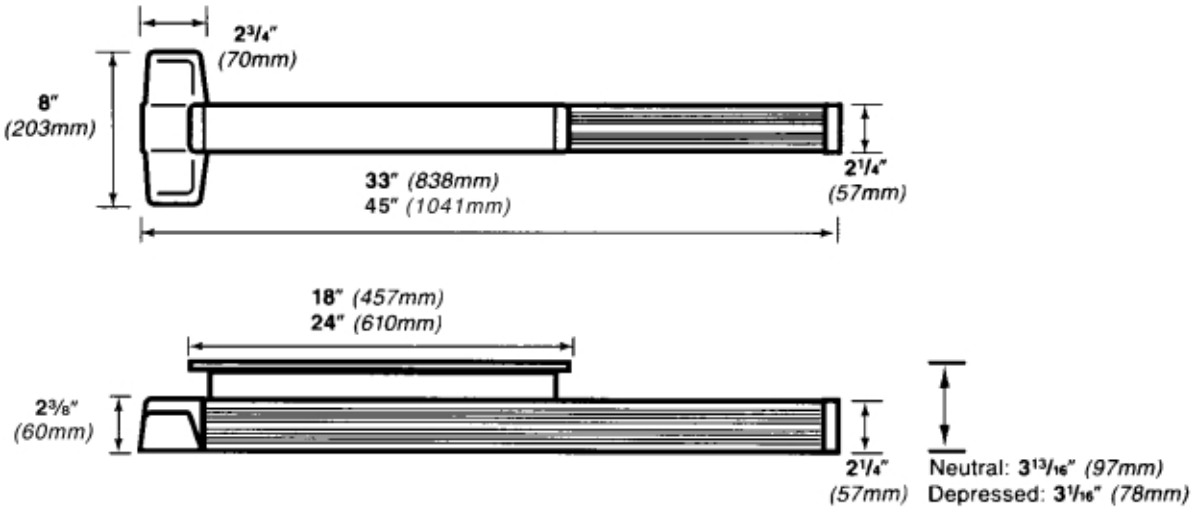

© 2004 Ingersoll-Rand. May be copied for use with specification submittal.

UL Listed Fire Exit Hardware Label and Opening Size

Exit Device	Door Material	Single Door	Double Door						
			With 9954 Mullion	With 9854 Mullion	With KR9954 Mullion	With KR9854 Mullion	VR/VR Same Direction	VR/Mortise Same Direction	VR/VR Double Egress
98-F 99-F	Metal	3 Hour 4’ x 10’	3 Hour 8’ x 10’	3 Hour 8’ x 10’	3 Hour 8’ x 8’	3 Hour 8’ x 8’	—	—	—
9875-F 9975-F	Metal	3 Hour 4’ x 10’	—	—	—	—	—	3 Hour 8’ x 10’	—
9827-F 9927-F	Metal	—	—	—	—	—	90 Minute* 8’ x 10’	3 Hour 8’ x 10’	3 Hour 8’ x 10’
9827LBR-F 9927LBR-F	Metal	—	—	—	—	—	90 Minute* 8’ x 10’	—	3 Hour 8’ x 10’
9857-F 9957-F	Metal	3 Hour 4’ x 8’	3 Hour 8’ x 8’	3 Hour 8’ x 8’	3 Hour 8’ x 8’	3 Hour 8’ x 8’	—	—	—
9847-F 9947-F	Metal	—	—	—	—	—	90 Minute* 8’ x 10’	3 Hour 8’ x 10’	3 Hour 8’ x 10’
9847LBR-F 9947LBR-F	Metal	—	—	—	—	—	90 Minute* 8’ x 10’	—	3 Hour 8’ x 10’
9848-F 9948-F	Metal	—	—	—	—	—	90 Minute* 8’ x 10’	3 Hour 8’ x 10’	3 Hour 8’ x 10’

*** Currently, no door manufacturers offer a listing over 90 minutes with doors swinging same direction. Consult wood door manufacturers for current UL listings.**

Alarm Kit – ALK

The ALK battery alarm kit is a simple yet effective way to deter unauthorized use of an opening. While the exit device is still a means of egress, the ALK kit contains an internal horn. When the touch bar is depressed, the horn sounds to provide an audible means of signaling that the opening has been violated. The alarm kit can be armed or disarmed by key. Thus allowing the exit device to be set in an armed or disarmed mode. The horn is rated at 85 decibel.

The key switch uses a standard 1¼" (32mm) mortise cylinder with a straight cam (Schlage Cam reference B502-191). The unit operates on one standard 9-volt alkaline battery. When the battery is weak, the horn will emit an intermittent low battery alert signal.

Also can be powered using the PS9 Power Supply. See PS9 for additional information.

Alarm kits are available with a choice of two switch kits, RX or LX. RX monitors the touchpad and is furnished standard. LX optional latch bolt monitoring is recommended for use with surface vertical rod exit devices. Specify ALK-LX.

Note: For latch bolt monitoring on a 98/9975 with ALK, specify a SS7500 lock. LX switch not available for 98/9975 devices.

The ALK is available in two styles, 33A/99ALK, grooved cover and 35A/98ALK, smooth cover.

The ALK includes "EMERGENCY EXIT ONLY. ALARM WILL SOUND" decal for application on door, or the SS push bar trim can be used instead of the door decal,specify SS push bar trim.

The ALK is available with 2 optional circuit boards. External Inhibit (EI) allows for the use of external switch to be used to arm, disarm and reset the alarm. Auto Reset (AR) rearms the alarm after a preset time. AR is available in three factory set times – 1½, 3 or 6 minutes.

To Order, Specify:

1. External Inhibit – ALK-EI
2. Auto Reset – ALK-AR3

When the ALK is used, standard dogging is removed. If cylinder dogging is required there are two choices. Special center case dogging is available or for 3' or 4' doors the ALK can be moved to the hinge side of the device and standard cylinder dogging can be added.

To Order, Specify:

1. Standard, 98NL ALK
2. Cylinder Dogging, CD98NL ALK
3. Special Center Case Dogging, SD98NL ALK

Minimum Door Opening Sizes on ALK Applications

Device	3' (914mm) Length	4' (1219mm) Length
98/98-F/99/99-F	2'9" (838mm)	3'3" (991mm)
9875/9875-F/9975/9975-F	2'9" (838mm)	3'3" (991mm)
9827/9827-F/9927/9927-F	2'8" (813mm)	3'2" (966mm)
9857/9857-F/9957/9957-F	2'8" (813mm)	3'2" (966mm)
9847/9847-F/9947/9947-F	2'8" (813mm)	3'2" (966mm)
9848/9848-F/9948/9948-F	2'8" (813mm)	3'2" (966mm)

Request to Exit — RX

The RX (Request to Exit) feature is used to signal the use of an opening. This device is equipped with one internal SPDT switch which monitors the pushpad.

The device can be connected to a security console, or may be used as a single door alarm when used with a horn and power supply. A continuous current electric transfer must be used for transferring power from the frame to the door.

The RX switch option should not be used to control a load, but as a signalling switch (0.5 amps. resisitive maximum).

The RX switch is available in a low current (LC) switch. Most commonly used in computer operated monitoring systems.

To Order, Specify:

- Standard – Use prefix RX, example RX99EO
- Low Current – Use prefix RX-LC, example RX-LC98EO

Double Request to Exit — RX2

The RX2 feature uses 2 RX switches. Also available with the Low Current (LC) switch.

To Order, Specify:

- Standard – Use prefix RX2, example RX299EO
- Low Current – Use prefix RX2-LC, example RX2-LC98EO

Latch Bolt Monitoring — LX

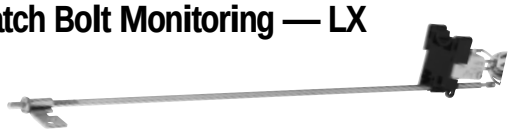

The LX feature is used to signal the use of an opening. This device is equipped with one internal SPDT switch which monitors the latch bolt.

The device can be connected to a security console, or may be used as a single door alarm when used with a horn and power supply. A continuous current electric transfer must be used for transferring power from the frame to the door.

The LX switch option should not be used to control a load, but as a signalling switch (0.5 amps. resistive maximum).

The LX switch is available in a low current (LC) switch. Most commonly used in computer operated monitoring systems.

To Order, Specify:

- Standard – Use prefix LX, example LX99EO
- Low Current – Use prefix LX-LC, example LX-LC98EO

Electrical Rating for all Switches:

- Standard – up to 0.5 Amp @ 24VDC Maximum
- Low Current (LC) - up to .05 Amp @ 24VDC Maximum

Note: All Switches can be either factory or field installed

© 2004 Ingersoll-Rand. May be copied for use with specification submittal.

Electric Latch Retraction — EL

The EL feature allows for the remote unlatching of exit devices. A control station operator can flip a switch to retract the latch bolt and immediately change an exit door to push-pull operation. A powerful, continuous duty solenoid retracts the latch bolt, either for momentary unlatching, or for extended periods of time. The EL feature is an alternative to manual dogging.

If manual hex-key dogging is required, specify HD-EL. If cylinder dogging is required, the standard cylinder dogging is not available, but special center case dogging is available, specify SD-EL. SD-EL is not available on the 9875 or 9975 devices.

EL devices are also useful with automatic door operators, and may be applied to fire-rated applications when under the control of an **automatic fire alarm system.**

UL approved for Class II circuit applications.

The EL option does not include the power transfer from door to frame, the power supply, or the control operator. Refer to EPT-2 power transfer and the PS873 power supply.

The PS873 with the 871-2 option card is minimum option card required. Other option cards available for other functions, see PS873 power supply for additional information.

Solenoid Specifications:

Continuous Duty — 24 VDC

Current Inrush — 16 Amps

Current Holding — 0.3 Amps

To order, specify:

Standard — Use prefix EL, example EL99L.
Hex Key dogging — Use prefix HD-EL, example HD-EL99L
Special Center Case Dogging — Use prefix SD-EL, example SD-EL99L

Popular EL Application

Power Supply PS873-2

Electric Power Transfer EPT-2 or EPT-10

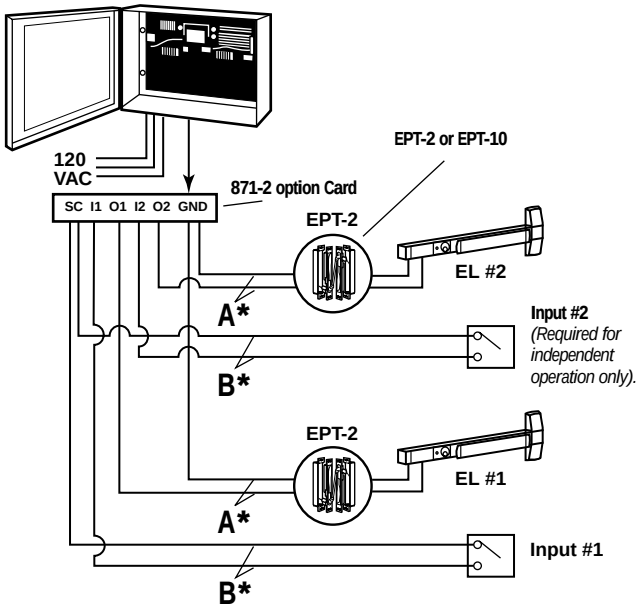

Signal Switch — SS

Monitors pushpad and latch bolt

The SS feature is used to signal the unauthorized use of an opening. This device is equipped with two internal SPDT switches. One switch monitors both the pushpad and the latch bolt assembly, making the latch bolt tamper resistant, for positive security. An additional SPDT switch is connected to the 1 ¼" *(32mm)* mortise with straight cam for alarm "bypass." (Schlage cam reference B502-191). The device can be connected to a security console, or may be used as a single door alarm when used with a horn and power supply. A continuous current electric transfer must be used for transferring power from the frame to the door.

Pushpad reads:
"EMERGENCY EXIT ONLY – PUSH TO OPEN AND SOUND ALARM."
Pushpad is only available in US32D finish with red silk-screened lettering.

The SS mortise lock device is furnished with both the signal switch device and the SS7500 mortise lock. The SS7500 mortise lock has the versatility and advantages of the 7500 lock with the addition of signalling functions to monitor latch bolt operation and the trim locking function. The SS7500 mortise lock is supplied standard with the SS mortise lock device.

To Order, Specify:

1. Prefix SS, example SS99L.
2. Handing Required, LHR or RHR.

Electrical Ratings:

Up to 2.0 AMPS @ 24VDC

Popular SS Application

Unauthorized use of this opening will activate the local horn.

The key switch permits inhibiting this system for authorized entry.

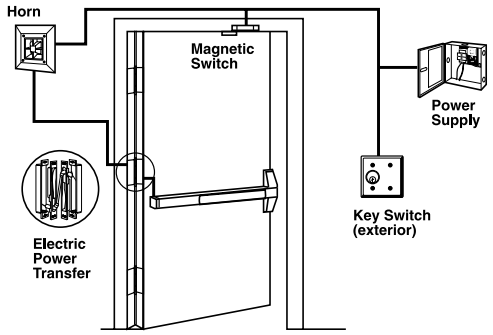

EL Device Wire Selection Size

A*

Run Length	EL Device w/EPT or Door Loop
0-100 ft.	14 gauge
100-200 ft.	12 gauge

A*

Run Length	EL Device w/Electric Hinge/Pivot
0-75 ft.	14 gauge
75-150 ft.	12 gauge

B*

Wire Selection	Switch Wire Size
1200 ft. Max.	18 gauge

Electric Mortise Lock Device — E

The electric mortise lock device has all the versatility and advantages of the standard mortise lock device, plus the advantage of being electrically controlled by a remote switching device, an access control system or an automatic fire alarm system. The device features the E7500 mortise lock. The E7500 controls the locking of the outside trim. When unlocked, the door remains latched, preserving the fire rating of the door and making it particularly useful where codes permit locking but require unlocking during a fire emergency. The outside trim cylinder retracts the latch bolt for mechanical override, night latch function. Only available with TP, K or L functions.

The E7500 lock contains a SPDT signal to monitor the outside trim condition (locked or unlocked) and a second SPDT signal switch to monitor the latch bolt.

Standard Features:
- Field reversible handing
- 24 VDC continuous duty solenoid

Optional Features:
- Fail safe (locked when energized, unlocked when de-energized or during power failure). Specify with suffix "FS."
- Fail secure (unlocked when energized, locked when de-energized or during power failure). Specify with suffix "FSE"
- 24 VAC (with SO option)
- 12 VDC
- 12 VAC (with SO option)

Note: Some Fire codes will require "Fail Safe" (FS) operation for stairwell doors. Be sure to specify the correct operation for your application.

Electrical Specifications:
- Solenoid — .60 AMPS @ 12VDC
  .30 AMPS @ 24VDC
- Each switch — Up to 2.0 AMPS @ 24VDC Maximum

The E option does not include the power transfer from door to frame, the power supply or the control operator. (Refer to EPT-10 and PS861 or PS873 power supply)

To Order, Specify:

1. Use prefix "E," example E9975.
2. FS or FSE
3. Voltage and current.

Electric Rim Device — E

The electric rim device provides remote locking and unlocking capabilities. A control station operator can flip a switch to lock or unlock the outside trim condition. The 24 VDC solenoid assembly contains a SPDT signal switch to monitor the outside trim condition (locked or unlocked), and a second SPDT signal switch to monitor the latch bolt.

The device is standard as fail safe (FS). When power is off, the trim is unlocked. The trim may then be relocked electrically by applying power. The device is field convertible for fail secure (FSE) applications.

The outside trim cylinder retracts the latch bolt for mechanical override, night latch function. Only available in TP, K or L function.

This feature does not include the power transfer from doors to frame, the power supply or control operator. Refer to the EPT-10 and PS861 or PS873 power supply.

NOTE: LX switch not required for E99 rim device when latch bolt monitoring is required. E99 Rim has standard latch bolt monitoring feature.

Specifications:
- Solenoid – 0.25 AMPS @ 24VDC
- Each switch – Up to 2.0 AMPS @ 24VDC Maximum

UL listed FVSR SA163 panic hardware
And GXHX R4504(N) fire exit hardware

To Order, Specify:

1. Use prefix "E," example E99TP.
2. Handing Required, LHR or RHR.

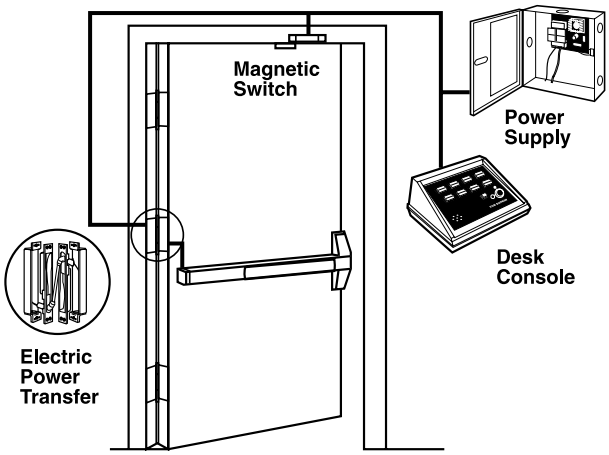

Electric Mortise Lock Device or Electric Rim Device

Adaptable for openings where continuous latching is required while the trim may be electrically locked or unlocked from a remote location—stairwells, exterior doors, etc.

Minimum System Requirements:
- PS861
- EPT-10

© 2004 Ingersoll-Rand. May be copied for use with specification submittal.

The Chexit®

Designed for use on delayed exit applications, the Chexit system is ideal for controlled areas.

All controls, auxiliary locking, local alarm, and remote signalling are self-contained in the Chexit, providing safe, secure, easy to install and simple to operate door control and exit hardware.

Chexit controlled exit device for use on Panic or Fire Exit hardware applications.

This concept in delayed exit systems combines life safety with the needs of security and meets all requirements of NFPA 101 for "Special Locking Arrangement."

The Chexit device includes decal for application on door.
"PUSH UNTIL ALARM SOUNDS.
DOOR CAN BE OPENED IN 15 SECONDS"

Solenoid Specifications:
- Continuous Duty – 24VDC
- Current Inrush – 16 amperes
- Current Holding – .3 amperes

Requires PS873 Power Supply

Request to Exit Switch:
Built into the device to detect when someone attempts to exit. Pushing the push pad when the device is armed will cause this switch to start an irreversible alarm cycle.

Nuisance Alarm:
When a Chexit is located in a public area, it can be desireable to limit false alarms. If the Nuisance Delay options are set to off, the device will go into alarm as soon as the push pad is touched (when armed). Turning the Nuisance Delay on will require the push pad to be pressed for 2 seconds before the Chexit goes into alarm. If the Nuisance Audible and Nuisance Delay are both on, the alarm will sound as soon as the push pad is pressed, but the alarm sequence will stop unless the push pad is held for 2 seconds or more.

Remote Alarm:
A set of relay contact are provided to give external alarm indication. These contact close when the device is in an irreversible alarm condition. These contact can be used to drive a horn, lamp, or other indicative device.

Key Switch:
The Key Switch provides the means to arm, disarm or reset the Chexit. The key can be removed in either the Arm or Disarm position.

Indicator Lamp:
The status of the Chexit can be determined by the indicator lamp. When the lamp is off, this indicates the device is disarmed and is functioning as a normal exit device (no delay). A continuously on lamp indicates the device has just been armed and as soon as the selectable rearm timer expires, the device will arm. A slow flashing lamp indicates the device is armed. A fast flashing indicator lamp indicates the device is in alarm.

Internal Horn:
Whenever the device is in alarm or the push pad is pressed the internal horn will sound. The volume level of this horn exceeds 85 db at 6 feet.

Door Position Input:
An external door position switch can be connected to the Chexit.

External Inhibit Input:
This optional input is provided to allow remote override of the Chexit in the armed condition. It also allows remoe reset of the Chexit in an alarmed condition.

Fire Alarm Input:
This input disables the Chexit immediately upon a fire alarm.

Internal Auxiliary Lock:
The Auxiliary Lock is engaged when the Chexit is armed. The locking mechanism is specifically designed to hold securely even when the exit device is struck with forceful blows.

User Defineable Rearm Time:
The Rearm time is the amount of time after the device is activated before it arms. It is designed to give someone time to pass through the door before rearming oocurs. Timing can be changed by the user for any time between 2 and 28 seconds in two second increments. There is also an infinite rearm setting that requires the use of an external door position switch. In this setting the door remains in the rearm mode until the door is closed. This can be useful on jet way doors in an airport.

***Factory Defineable Delay Time*:**
Most jurisdictions allow 15 seconds of delay before allowing egress. In those cases where 15 seconds is not appropriate, Von Duprin can set the Chexit for any delay time between 0 and 60 seconds on 2 second increments. For delays greater than 15 seconds a letter from the local authority is required.

Electrical Accessories

Power Supplies

SERIES PS873

The series PS873 power supply is designed to operate a wide variety of electrical products. EL panics require 871-2 PCB minimum. The regulated output power is field selectable for either 24VDC @ 2 ampere or 12VDC @ 4 ampere. Standard input 120VAC @ 1.0 ampere or 240VAC @ 0.5 ampere available. Enclosure is 10" high x 12½" wide x 5" deep *(254mm x 323mm x 127mm)*, gray with a hinged cover and constructed of heavy 19 gauge steel. Five ½" x ¾" *(13mm x 19mm)* knockout holes are provided for conduit connection. Terminal block will accept up to 12 gauge wire.

The PS873 can be ordered with three standard options: **Key lock** secures the cover to eliminate tampering and provides safety; **Battery backup** provides two hours backup power at full load during a A.C. power failure. Batteries will automatically recharge when failed power is restored. **Fire Alarm** provides input for a normally closed fire alarm contact. When the fire alarm contact is "open", power to locks or other component is removed. Restoring power is field selectable for automatic or manual.

Eight standard configurations:

PS873	Standard
PS873K	With keylock
PS873B	With battery
PS873BK	With battery and keylock
PS873FA	With fire alarm
PS873K-FA	With keylock and fire alarm
PS873B-FA	With battery and fire alarm
PS873BK-FA	With battery, keylock and fire alarm

The series PS873 is available with several optional circuit cards to provide system flexibility. The power supply will accept one or a combination of any two cards.

Factory or Field Installed Circuit Cards:

871-2, Two Zone controller provides two inputs and two outputs. Will operate one or two EL exit devices. Use suffix "-2" for factory installed, example PS873-2.

873-AL, Alarm function monitors 1 or 2 zones and provides alarm output, upon detecting a door in the open position. Delayed alarming is selectable from 5 to 75 seconds. Use suffix "-AL" for factory installed, example PS873-AL

873-AO, Auto Operator function coordinates the release of one or two locks and signals an auto-operator to open a door. Signaling the auto operator can be performed in two methods; by receiving a signal from a monitoring switch that the lock is unlatched, or upon expiration of a time delay triggered by a "RX" type input switch. Use suffix "-AO" for factory installed, example PS873-AO

873-SI, Security/Safety Interlock provide interlock function for two zones. When combined with a second 873-SI card, the inter-locking of groups are available in two, three or four zones. Safety interlock is available, consult factory for additional information. Use suffix "-SI" for factory installed, example PS873-SI

873-4TD, Four Zone controller with **Time Delay** provides four inputs and four outputs with time delay. Time delay is field selectable from 0 to 75 seconds, in intervals of 5 seconds. Will operate up to 4 EL devices. Use suffix "-4TD" for factory installed, example PS873-4TD

873-AC, Access Control provides supervision of one zone using an electromagnetic lock. Input signals required are: access control contact, motion detector contact, and motion detector override contact. FA, Fire Alarm option is required. Use suffix "-AC" for factory installed, example PS873-AC

Factory Installed Only Circuit Card

873-DE, Delayed Egress provides 15 second delay release from pushbar activation to electro-magnetic lock release. Ideal function for use with Locknetics electromagnetic locks, will operate two zones simultaneously. To operate two separate zones, a second 873-DE card is required. UL listed component, when used as part of a Von Duprin delayed egress system. Use suffix "- DE", example, PS873-DE.

Note: "DE" cards CANNOT be combined with any other optional cards.

© 2004 Ingersoll-Rand. May be copied for use with specification submittal.

Electrical Accessories

Power Supplies
PS861 Power Supply

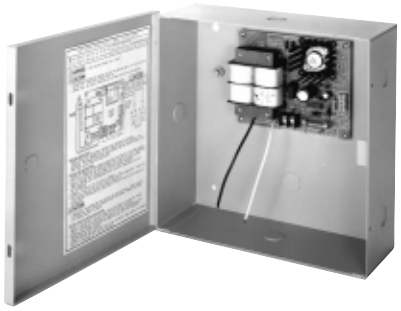

Standard
UL Listed
Class 2, Power Supply
UL1012
UL1310

The series PS861 power supply is designed for electric locking or monitoring on single or double door applications. The output power is field selectable for either 24 VDC @ 1 ampere or 12 VDC @ 2 ampere. Standard input 120 VAC @ 0.6 ampere and 240 VAC @ 3.0 ampere available. The terminal block will accept up to 14 gauge stranded wire.

The gray enclosure is 10" x 10" x 4" *(254mm x 254mm x 102mm)*, has a hinged cover, and is constructed of heavy 19 gauge steel. Six ½" *(13mm)* knockout holes are provided for conduit connection.

Options include keylock cover or Battery Backup. The pair of batteries, which are sealed lead acid battery packs, will provide back-up power for three hours at full load or seven hours at half load. Batteries will automatically recharge when failed power is restored.

Four Models:

PS861	Standard supply
PS861K	Standard supply with keylock cover
PS861B	Battery backup
PS861FA	Fire Alarm
PS861BK	Battery backup and keylock cover
PS861BKFA	Battery backup and keylock cover with FA board (24VDC only)

PS9 Power Supply

The PS9 is an AC power supply that provides 9 VDC power to operate the ALK alarm kit. The unit will power one or two alarm kits. Included is a 9-volt sealed battery that provides backup power in case of an AC power failure.

Electrical Power Transfer –– EPT
Pneumatic Transfer – PNT

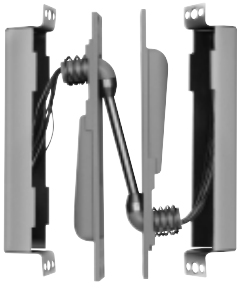

Electric Power Transfer provides a means of transferring electrical power from a door frame to the edge of a swinging door. The units are completely concealed when the door is in the closed position, and are ideally suite for installations involving abuse or heavy traffic.

Two models are available; EPT-2, two 18 gauge wires and EPT-10, ten 24 gauge wires. The EPT-2 and EPT-10 are U/L listed as "miscellaneous door accessory".

Pneumatic Controls

PNT-1 is available for pneumatic latch retraction exit devices. Appearance and dimensions are identical to EPT models.

UL Listed for use on firedoors

Door applications:
up to 5" butt hinges – 180˚ swing,
5½" butt hinges – 130˚ swing,
6" butt hinges – 110˚ swing,
¾" butt offset pivots 180˚ swing.

Not for use with swing clear hinges or center-hung pivots.

Finishes

SP28 (sprayed aluminum)

SP313 (sprayed duranodic).

Dimensions

Housing	9" x 1 ¼" x 1 ⅝" *(229mm x 32mm x 38mm)*
EPT-2	Two 18 gauge wires, Up to 2 AMPS @ 24VDC, with a 16 AMPS Maximum Surge
EPT-10	Ten 24 gauge wires, Up to 1 AMPS @ 24VDC, with a 16 AMPS Maximum Surge
PNT-1	5/32" Tubing

To order, specify:

1. EPT-2 ,EPT-10 or PNT-1.
2. Finish, SP28 or SP313.

Pneumatic Controlled Exit Devices–PN

The PN feature provides remote latch bolt retraction in hazardous areas where electrically operated devices would not be permitted. The pneumatic solenoid will retract the latch bolt for momentary or prolonged periods. PN exit devices are particularly suited for use with automatic door operators. The PN feature is available on both Panic and Fire Exit Hardware devices.

The PN feature includes a special actuating linkage that gives building owners the option of mechanically or pneumatically dogging the exit device. If manual hex-key dogging is required, specify HD-PN (Dogging the device, whether mechanically or pneumatically, makes the device function as a push/pull unit and reduces the wear on its moving parts.) If cylinder dogging is required, the standard cylinder dogging is not available, but special center case dogging is available, specify SD-PN. SD-PN is not available on the 9875 or 9975 devices.

When activated pneumatically, the latch bolt(s) of the exit device retract in ½ to 1 ½ seconds. This pneumatic operation uses air pressure ranging from 50 to 100 pounds per square inch.

This product will function only when it is part of a pneumatic system (air compressor, air lines, pneumatic system, etc.). Contact LCN for correct control boxes

To Order, Specify:

- Standard — Use prefix PN, example PN99NL
- Hex Key Dogging — Use prefix HD-PN, example HD-PN99NL
- Special Center Case Dogging — Use prefix SD-PN, example SD-PN99NL

Double Cylinder – 2

Double cylinder features an inside key cylinder which locks or unlocks the outside trim and an outside key cylinder which retracts the latch bolt only(Night Latch Function) . Available on rim or mortise lock device.

Rim requires two rim type cylinders. Mortise device requires 1 rim cylinder and 1 mortise cylinder 1¼" with a straight cam. (Schlage cam reference B502-191.)

Available functions are thumbpiece, knob or lever.

To Order, Specify:

1. Suffix-2 with device/trim number, example 99TP-2.
2. Handing required, LHR or RHR.

Less Dogging – LD

Less Dogging is available in all 98/99™ Panic Exit devices to remove the dogging option.

To Order, Specify:

- Use prefix LD, example LD99L

Special Center Case Dogging – SD

Special cylinder dogging in the center case is available for Chexit, EL, ALK panic devices to allow for mechanical push/pull operation. With this option, the latchbolt is held retracted and pushbar is still operable. Specify handing — RHR or LHR.

SD requires 1 ¼" (32mm) mortise cylinder with a straight cam. (Schlage cam reference B502-191.)

Note: Available on Rim and Vertical Rod Panic Exit Devices only.

To Order, Specify:

- Use prefix SD, example SD99L

Cylinder Dogging — CD

Cylinder dogging is available on all 98/99™ Panic Exit devices to replace the standard hex key dogging. Unit requires a standard 1¼" *(32mm)* mortise cylinder with a straight cam (Schlage Cam B502-191 reference).

To Order, Specify:

- Use prefix, CD, example CD99L

Cylinder Dogging Kit — CDK

For field conversion, a cylinder dogging conversion kit is available. Cannot be added to fire exit hardware.

Order: 33A/99CDK or **35A/98CDK**, specify finish.

Hex Key Dogging Kit — HDK

For field conversion, a hex key dogging conversion kit is available. Cannot be added to fire exit hardware.

Order: 33A/99HDK or **35A/98HDK**, specify finish.

Braille, Embossed and Knurled Touchpads

Braille touchpad is embossed with the message “CAUTION STAIRWELL” in braille and raised letters provides assistance to person with impaired vision. Letters are ½" (13mm) high and braille is #2, raised height is 3⁄32" (2mm). Other messages are available on special order, limited to 20 characters per line.

Embossed touchpad is embossed with the word “PUSH”
Knurled touchpad is to provide warning to person with impaired vision.

© 2004 Ingersoll-Rand. May be copied for use with specification submittal.

Vertical Rod and Latch Guard — RG-27

Rod Guard

Series RG-27 Vertical Rod and Latch Guards protect the bottom rods of exit devices from the damaging impacts of carts or gurneys passing through doors. (If bottom rods become damaged, the exit device will not function as intended and can jeopardize the ability to exit safely during an emergency.)

In addition to protecting the vertical rod, the guard provides a smooth, unobstructed surface so the door can be pushed open easily with the bumpers of a wheelchair. The latch guard portion is 10" high. The standard latch guard features a 45° ramp. The extended latch guard offers a continuous ramp in 3' or 4' widths.

All stainless steel construction in US32D finish. Latch guards can cover latches as large as 1¼"W x 10"H x 1⅞" projection.

Latch Guard

Models
RGO — Rod guard only (Projection 1 3⁄16").
RG-27 — Rod and latch guard.
RG-27-3 — 3' *(914mm)* Rod Guard and Extended Latch Guard.
RG-27-4 — 4' *(1219mm)* Rod Guard and Extended Latch Guard.

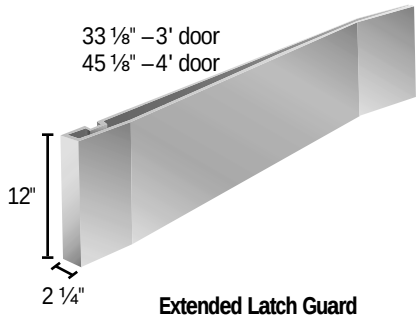

Extended Latch Guard

LGO — Latch guard only.
LGO-3 — 3' *(914mm)* Extended latch guard only.
LGO-4 — 4' *(1219mm)* Extended latch guard only.

Note: Not for use on wood fire doors

To Order, Specify:

1. Model number.
2. Handing (except on RGO).
3. Door material if other than Hollow Metal.
4. Optional sex bolt mounting available.

Less Bottom Rod – LBR

LBR option is available, using a spring loaded auxiliary latch bolt installed in the lower door edge. When exposed to heat the auxiliary latch bolt releases, keeping the doors in alignment and closed during a fire. UL listed 3 hours on hollow metal doors double egress, 90 minute swinging same direction, and 20 minutes wood doors (consult wood door manufacturer). Fits door stiles as narrow as 3⅝".

LBR devices must be ordered in pairs or must be used in conjunction with an approved automatic or constant latching flush bolt.

Pullman Latch – PL

When PL is specified the standard latches are replaced with pullman style latches. Pullman latches are always extended and are most commonly used in conjunction with electric strikes and LBR-less bottom rod application. Not available with Fire rated devices. Not recommended where security is of the utmost since latches do not deadlock.

Glass Bead Kit – GBK

Glass bead conversion kits are available for all 98/99™ Series devices for use on doors with raised glass beads. Each kit consists of ¼" *(6mm)* shim sets. GBK for Surface Vertical Rod ships with ⅛" shims for rod guides.

To order, specify:

1. 99GBK
2. Device type (Rim, Mortise, Surface Vertical Rod, Concealed Vertical Rod)
3. Wood Door, when used with Concealed Vertical Rod

997 Cover Plate Kit

For 99 rim device, kit contains inside and outside plates for hinge stile cutouts, an inside plate for the lock stile, and necessary screws. Plates are designed to cover cutouts required by most existing exit device installations. Specify finish.

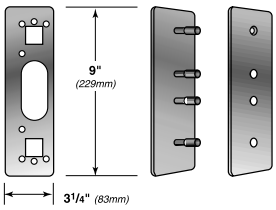

Dummy Pushpad

The 330 dummy pushpad is designed as a companion unit for all 99 devices. The 350 dummy pushpad is a companion unit for all 98 devices. The pushpad is rigid or nonfunctioning. A push/pull operation can be accomplished by using 990DT, 996DT trim or any Ives Pull.

The 330/350 can be equipped with a functional pushpad and will accommodate an RX switch. Specify RX-330. May also be equipped with the RX2, double RX switch. Specify RX2-330

To order, specify:

1. 330 or 350.
2. Size 3' or 4' *(914mm or 1219mm)*
3. Finish, US3, US4, US10, US26, US26D, US28, 313AN, 315AN, 350 Only US32D.

Cylinders

Cylinders are not furnished with device or trim and must be specified when ordering. Refer to trim pages for cylinder type.

Mortise — 3215 (Schlage B502-191 cam)

Rim 3216

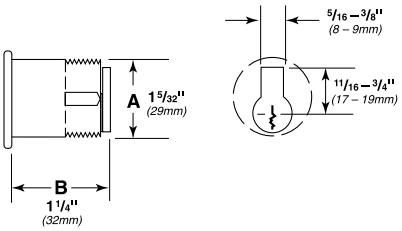

Dogged (Inverted) Cam

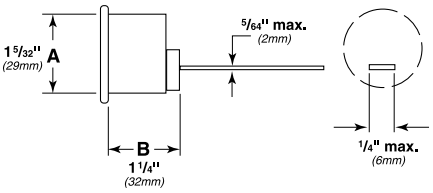

Undogged Cam
(Standard Operations)

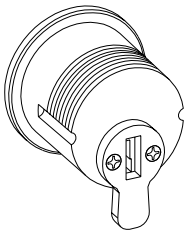

For Cylinder Dogging

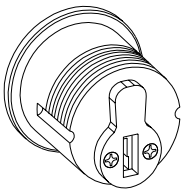

For Standard Trim Functions

Door Handing

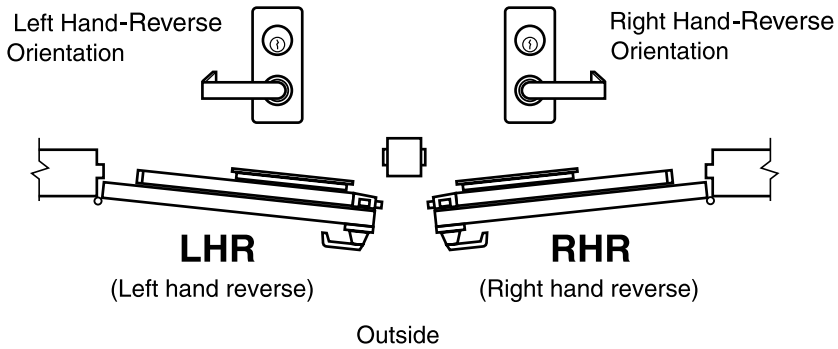

© 2004 Ingersoll-Rand. May be copied for use with specification submittal.

Popular Double Door Applications

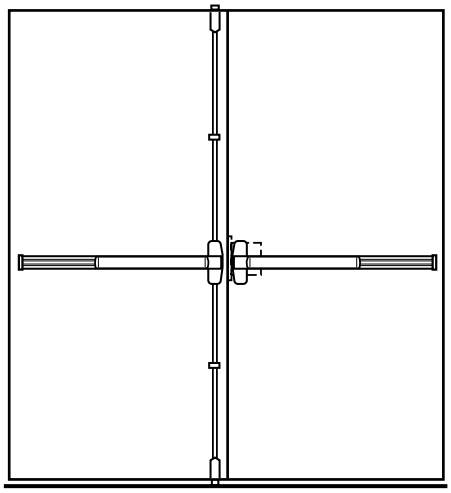

Mortise lock and surface mounted or Concealed Vertical rod device combination—same direction

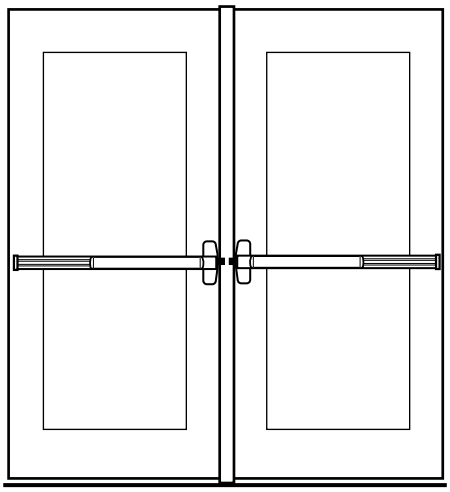

Two rim devices with mullion—same direction

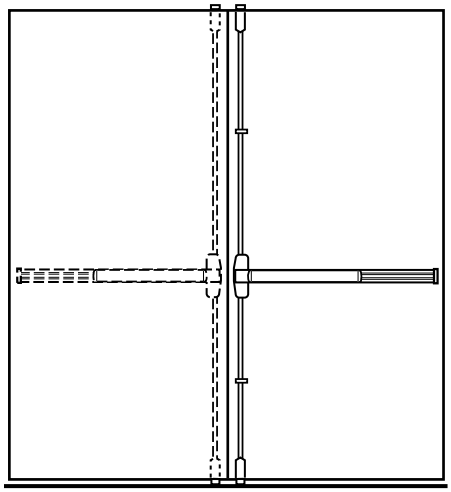

Two vertical rods—double egress

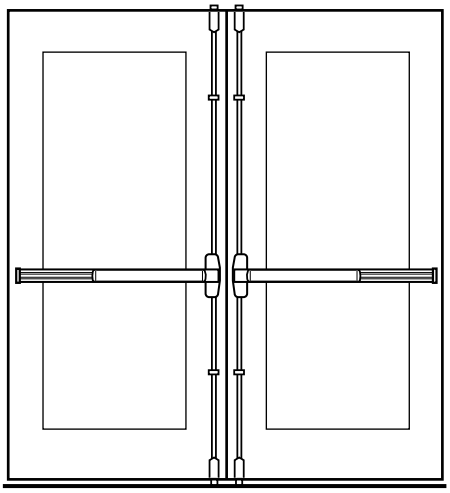

Two surface mounted vertical rod devices—same direction
(do not use with overlapping astragal)

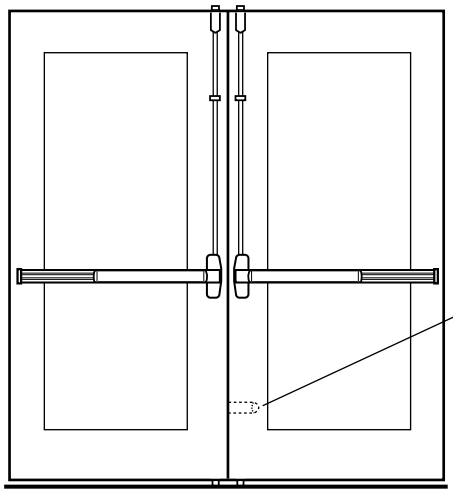

Two FEH vertical rods with auxiliary fire latch—LBR option

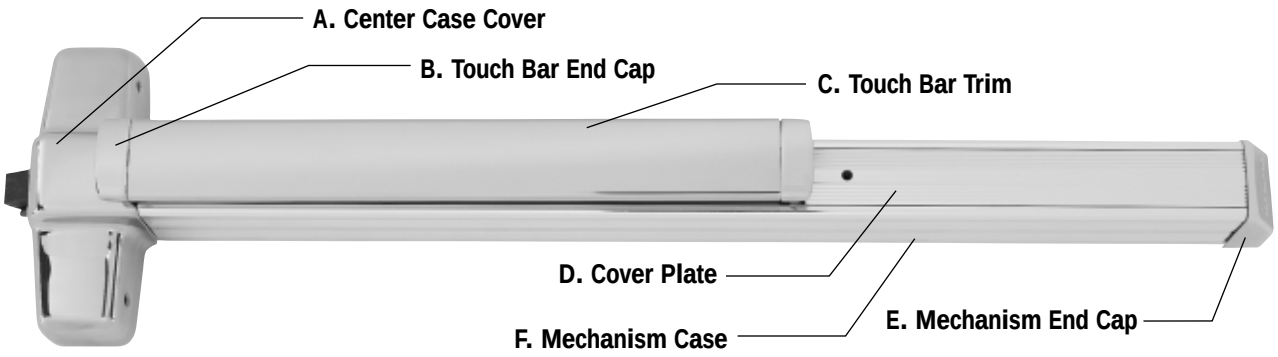

Finishes

Color	US Number	BHMA Number	A, B, E	C	D & F
Brass, Polished	US3	605	Plated	Brass, Polished US3, 605	Buffed Anodized
Brass, Satin	US4	606	Plated	Brass, Dull US4, 606	Anodized
Bronze, Satin	US10	612	Plated/Anodized	Bronze, Dull US10, 612	Anodized
Chrome, Polished	US26	625	Plated	Stainless Steel, Polished US32, 629	Buffed Anodized
Chrome, Satin	US26D	626	Plated	Stainless Steel, Satin US32D, 630	Anodized
Stainless Steel, Satin*	US32D	630	Stainless Steel	Stainless Steel, Satin US32D, 630	Anodized
Aluminum, Anodized	US28	628	Powder Coat	Stainless Steel, Satin US32D, 630	Anodized
Duranodic Dark Bronze	313AN	710	Powder Coat	Brown Wrinkle Powder Coat	Anodized
Black Anodized	315AN	–	Powder Coat	Black Wrinkle Powder Coat	Anodized

Special Finishes

Color	US Number	BHMA Number	A, B, E	C	D & F
Bronze, Oil-Rubbed Satin	US10B	613	Plated	Bronze, US10B, 613	Anodized
Powder Coat	RAL #	–	Powder Coat	Stainless Steel, Satin US32D, 630	Powder Coat
Bronze, Polished	US9	611	Plated	Bronze, Polished US9, 611	Buffed Anodized
Nickel, Satin	US15	619	Plated	Stainless Steel, Satin US32D	Anodized

Touch Bar Trim Options:

Knurled

Embossed “Push”

Braille, US32D Only, Embossed “Caution Stairwell”

SS, US32D Only, Red silk screen lettered “EMERGENCY EXIT ONLY – PUSH TO OPEN AND SOUND ALARM.”

**US32D Finish—available on Series 98 only*

© 2004 Ingersoll-Rand. May be copied for use with specification submittal.

Nomenclature – How To Order

EL 99 27 -L -16 -F LBR 3' US3 RHR

SD — Special Dogging - Panic Only
CD — Cylinder Dogging - Panic Only
CX — Chexit
E — Electric Locking (Rim or Mortise)
EL — Electric Latch Retraction
LX — Latch Bolt Monitoring
PL — Pullman Latch
PN — Pneumatic Latch Retraction
RX — Request to Exit
RX2 — Double Request to Exit
SS — Signal Switch

98 — Series 98-smooth
99 — Series 99-grooved

None — Rim Device
27 — Surface Mounted Vertical Rod Device
47 — Concealed Vertical Rod Device
47WDC — Concealed Vertical Rod Wood Door Device
48 — Concealed Vertical Rod Device
57 — Three Point Latch Device
75 — Mortise Lock Device

DT — Dummy Trim
EO — Exit Only
K — Knob (Classroom)
K-BE — Knob-Blank Escutcheoon
K-DT — Knob-Dummy Trim
K-NL — Rigid Knob - NightLatch (Key retracts Latchbolt)
L — Lever (Classroom)
L-BE — Lever-Blank Escutcheon
L-DT — Lever-Dummy Trim
L-NL — Rigid Lever - Night Latch (Key retracts Latchbolt)
NL — Night Latch (Key retracts Latchbolt)
NL-OP — Night Latch Cylinder Assembly — Optional Pull
TL — Turn Lever
TL-BE — Turn Lever-Blank Escutcheon
TP — Thumbpiece
TP-BE — Thumbpiece-Blank Escutcheon

XX — Lever Style 06 standard
optional — 01, 02, 03, 05, 07, 12, 16, 17, 18

F — Fire Exit Device

LBR — Less Bottom Rod
2 — Double Cylinder (Rim & Mortise Only)
ALK — Standard Alarm Kit
ALK-EI — External Inhibit Alarm Kit
ALK-AR1 — Auto-Reset 1½ minute Alarm Kit
ALK-AR3 — Auto-Reset 3 minute Alarm kit
ALK-AR6 — Auto-Reset 6 minute Alarm Kit

3' — 3' Device (2' 4" — 3' Door Size)
4' — 4' Device (2' 10" — 4' Door Size)

US3, US4, US10, US26, US26D, 313AN, 315AN
US32D – 98 ONLY

– HR — Handing – RHR or LHR

© 2004 Ingersoll-Rand. May be copied for use with specification submittal.

VON DUPRIN®

98/99™ Series Exit Devices

International Offices

Canada / Latin America

IR Security & Safety
1076 Lakeshore Road East
Mississauga, Ontario,
L5E 1E4, Canada
(905) 403-1800
(905) 278-1413 FAX
(877) 590-4734

North-East Asia

IR Security & Safety
23/F, 625 King's Road
Northpoint, Hong Kong
+(852) 2235-0600
+(852) 2565-1409 FAX

South-East Asia / Australia / NZ

IR Architectural Hardware Ltd.
P.O. Box 19-347
437 Rosebank Road,
Avondale, Auckland, New Zealand
+64 (0) 9-829-0550
+64 (0) 9-829-0552 FAX
www.irarchitecturalhardware.co.nz

Mexico

IR Security & Safety
Blvd. Centro Industrial No. 11
Puentas de Vigag, Tlalnepantla
Estado de Mexico, 54070 Mexico
+525-5-8503-6614

Europe / Middle-East / Africa

IR Security & Safety Ltd.
Bescot Crescent
Walsall, West Midlands WS1 4DL
United Kingdom
+44 (0)1922 707400
+44 (0)1922 646303 FAX
www.irsecurityandsafety.co.uk

Visit Von Duprin on the web

www.vonduprin.com

or contact an

IR Security & Safety Consultant

1-877-840-3621

Security & Safety
Proven Source. Proven Solutions.™

VON DUPRIN

Administrative Offices
2720 Tobey Dr.
Indianapolis, IN 46219
317-613-8944
317-613-8302 Fax

Customer Service
800-999-0408
800-999-0328 Fax

Technical Support
888-371-7331
317-613-8509 Fax

©2004 Ingersoll-Rand Form VD-GN-1005 Rev. 2/04 Printed in USA

An Ingersoll-Rand business

David A. Ely, AIA

243 Clark Hill Rd, New Boston, NH 03070 ■ David@windyhillassociates.com ■ 603-487-5252

Summary of Experience:
Thirty-seven years of experience in architecture and construction including commercial, residential, institutional and municipal design work. Areas of expertise include new construction, adaptive re-use, renovations, site evaluation, energy efficiency, lender representation, and construction administration.

February 1995 – Present
Windy Hill Associates, New Boston, NH
Partner, Architect
Principal architect for residential, commercial, municipal and institutional projects including Oasis Hot Tubs and Saunas, Russell D. Mann Dentist Office, Pine Hill Waldorf School addition and renovations, Community Center at Plowshare Life-sharing Farm, a 22 unit sustainable single family subdivision in Wilton, NH, and numerous single family residential projects. Lender representation for Sovereign Bank, Boston, reviewing construction work-in-progress, contract compliance and construction documentation for $17 million private school project and $24 million hospital project. Founding member of AIA-NH Environmental Guild's Integrated Design Integrated Development educational seminars.

July 1994 - February 1995
Sherman Greiner Halle, Ltd, Concord, NH
Project manager for the State Fire Training firehouse and dormitory, Concord, NH

April 1991 – July 1994
Leonard, Lee and Co, Merrimack, NH
Consultant and commercial real estate broker, concurrent with private architectural practice.

August 1989 - July 1994
Private Architectural Practice, Wilton, NH
Residential, commercial and institutional projects including Bursey's market, Temple Wilton Community Farm, Pine Hill Waldorf School addition and renovations, and residential projects.

November 1986 - August 1989
William J. Gavin Associates, Architects, Lowell, MA
Internship and project architect for historic renovation, commercial, institutional and industrial projects including Fred C. Church Insurance Office addition and renovations, Lowell Honda Kawasaki, Coach Run Condominiums, The Phillips Building new 24,000 sq ft office and industrial building, Lowell Institution for Savings branch bank renovations, Andover Savings Bank branch bank renovations, Trull Brook Golf Course clubhouse addition, Lowell Gaslight Building historic renovations.

March 1985 - October 1986
J. C. Rogers Construction, Stillwater, OK
Designer and construction supervisor for residential development of 70 super-insulated passive solar homes.

Oklahoma State University, Bachelor of Architectural Studies, 1984

July 1973 - August 1980 (and part time during college)
Carpenter, trim carpenter, cabinet maker.

July 1967 - July 1973
U. S. Navy, Sonar Technician

May 1965 - July 1967
Nolan and Clark, Architects, Crown Point, IN.
Part-time office assistant.

Licensure:
New York Architect, 1991
New Hampshire Architect, 1992

Affiliations:
American Institute of Architects
AIA-NH Environmental Guild Chairman
NH and Northeast Sustainable Energy Association
New Boston Master Plan Committee Chairman
New Boston Open Space Committee

Other Special Training:
Integrated Design Integrated Development workshops, coordinator since 2001
Mold management seminar
Green Specifications seminar
Ed Mazria and the 2030 challenge
Northeast Sustainable Energy Assoc, various seminars
Passive Solar Design workshop
Energy Efficient Windows workshop
LEED training
On-going annual continuing education workshops

Other interests include cross country, back country and down-hill skiing, road and mountain bicycling, music, wine-making, furniture making.